RESTRICTED

AIR FORCE HEAD-QUARTERS

JAPANESE AMMUNITION & PYROTECHNICS

INTRODUCTION

1. This publication is issued primarily for the information and guidance of R.A.A.F. Bomb Disposal Squads, who are solely responsible for the actual disposal of enemy bombs, mines, ammunition, pyrotechnics and booby traps in R.A.A.F. controlled areas.

2. Leaflets containing incomplete information must be regarded as provisional, the details having been extracted from captured documents, and/or based on the reconstruction of exploded specimens, any such information will however serve to indicate the existance of such items.

3. Incomplete or meagre information contained in any leaflet will by virtue of its incompleteness, advise of the particular item on which further details are required and in some measure assist in identification

TALPO.IT
TALPO.IT
TALPO.IT

ISSUED BY DIRECTORATE OF ARMAMENT

DATE OF ISSUE:

A.C.D. 155	LEAFLET No. 5/10	SECTION No. 3

BOMB SUSPENSION METHODS

NAVY SUSPENSION LUG

NAVY SUSPENSION BANDS

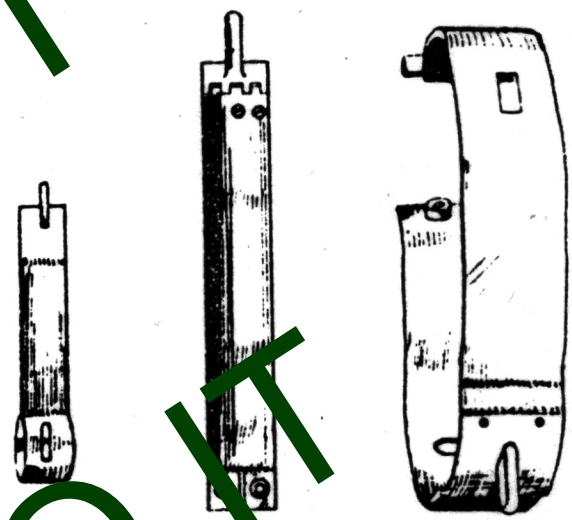

BAND FOR 250 KG. BOMB | BAND FOR 500 KG. BOMB | BAND FOR 800 KG. BOMB

ARMY SUSPENSION LUG

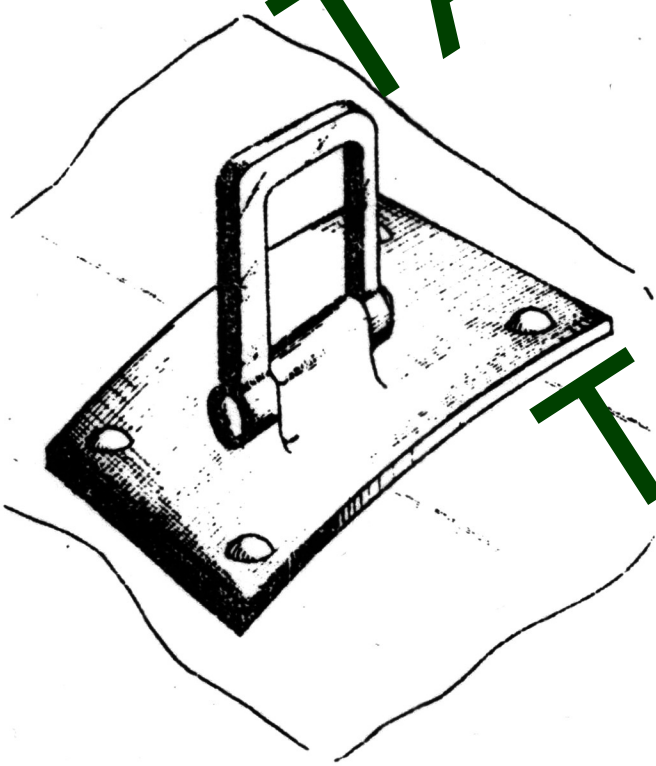

ARMY SUSPENSION LUG ATTACHMENT WHEN USING NAVY BOMBS

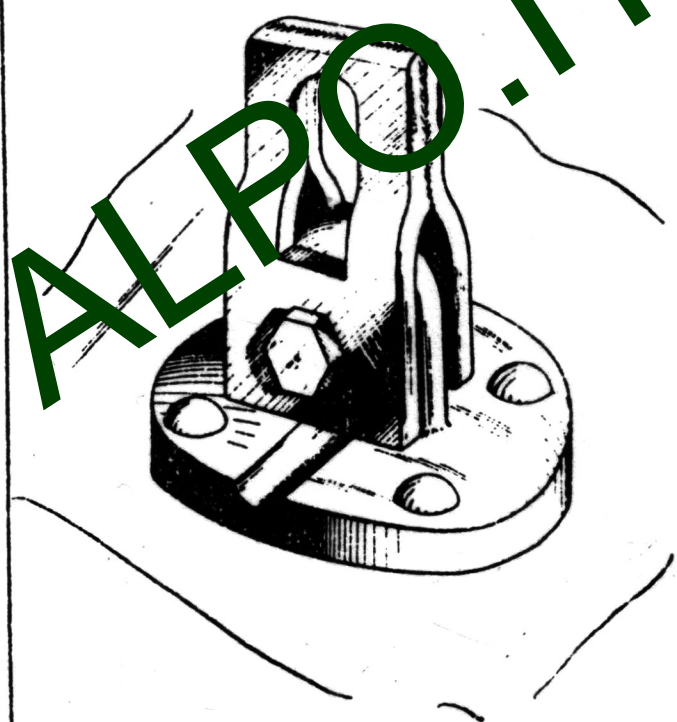

TALPO.IT
TALPO.IT
TALPO.IT

SECTION NO. 5

BOMBS - HIGH EXPLOSIVE

INDEX

LEAFLET NO.	SUBJECT	
0/03	BOMB H.E. AIRCRAFT 1/3 KG.	- Type 2, 40 m.m. Dispersion Bomb
0/04	BOMB (AERIAL PARACHUTE) 0.4 KG.	-
0/05	BOMB H.E. AIRCRAFT 0.5 KG.	- Type 3, 0.5 KG. Bomb
0/10	BOMB, HE. AIRCRAFT 1 KG.	-
0/11	BOMB H.E. AIRCRAFT 1 KG.	-
0/16	BOMB H.E. AIRCRAFT 1 2/3 KG.	- Type 2, Air to Air Vertically Connected Bomb
0/50	BOMB H.E. AIRCRAFT 5 KG.	- Type 2, Air to Air Vertically Connected Bombs.
0/75	BOMB H.E. AIRCRAFT 7.5 KG.	- Type Mark 19, No. 0.75
1/00	BOMB H.E. CABLE - AIRCRAFT 10 KG.	
1/50	BOMB H.E. AIRCRAFT 15 KG.	- Type 92
1/55	BOMB H.E. AIRCRAFT 15 KG.	- Type 97, Steel Frag. filled Cement Bomb
3/00	BOMB H.E. AIRCRAFT 30 KG.	-Type No. 3, Ordinary
3/05	BOMB H.E. AIRCRAFT 30 KG.	- Type 99

TALPO.IT
TALPO.IT
TALPO.IT

LEAFLET NO.	SUBJECT
3/10	BOMB, H.E. AIRCRAFT 30 KG. - Type 1
5/00	BOMB, H.E. AIRCRAFT 50 KG. - Type 94
5/05	BOMB, H.E. AIRCRAFT 50 KG. - Type 94 (Modified)
5/10	BOMB, H.E. AIRCRAFT 50 KG. - Type 1
5/15	BOMB, H.E. AIRCRAFT 50 KG. - Type 3
6/00	BOMB, H.E. AIRCRAFT 60 KG. - Type 97, No. 6, Land Modification 1
6/10	BOMB, H.E. AIRCRAFT 60 KG. -
6/20	BOMB, H.E. AIRCRAFT 60 KG. - Type, No. 6, Ordinary
6/30	BOMB, H.E. AIRCRAFT 60 KG. - Type 3, Mark 23, No.6 Model 1
6/40	BOMB, H.E. AIRCRAFT 60 KG. - Type 99, No. 6, Ordinary (Navy) Type 4, 60 KG Anti-Vessel Bomb (Army)
6/50	BOMB, H.E. AIRCRAFT 60 KG. - Type 99, No. 6, Mark 2 (Navy) Type 4, 60 KG Anti-Submarine (Army)
6/51	BOMB, H.E., AIRCRAFT 60 KG. - TYPE 99, No 6, MARK 2, MOD. 1
10/00.	BOMB, H.E. AIRCRAFT 100 KG. - Type 94
10/10	BOMB, H.E. AIRCRAFT 100 KG. - Type 1

TALPO.IT
TALPO.IT
TALPO.IT

INDEX

LEAFLET NO.	SUBJECT	
10/20	BOMB H.E. AIRCRAFT 100 KG	- Type 3
10/30	BOMB H.E. AIRCRAFT 100 KG	- Type 3, 100 KG Skipping Model Bomb
10/35	BOMB H.E. AIRCRAFT 100 KG	- Type 4, 100 KG Skipping Bomb
20/60	BOMB, H.E. A.R. AIRCRAFT 200 KG.	- Experimental, 200 KG. A.R. Bomb
25/00	BOMB H.E. AIRCRAFT 250 KG	- Type , No. 25, Land Mod. 1
25/05	BOMB H.E. AIRCRAFT 250 KG	- Type 98, No. 25, Land
25/10	BOMB H.E. AIRCRAFT 250 KG	- Experimental, Type 18 Mark 26, No. 25.
25/20	BOMB H.E. AIRCRAFT 250 KG	- Type No. 25, Ordinary Model 2.
25/25	BOMB H.E. AIRCRAFT 250 KG	- Type 99, No. 25, Ordinary (Navy) Type 4, Anti-Vessel Bomb (Army)
25/30	BOMB H.E. AIRCRAFT 250 KG	- Type 1, Mark 3, No. 25
25/35	BOMB H.E. AIRCRAFT 250 KG	- Type 1, Mark 2, No. 25, Model 1, Mod. 1 (Navy) Type 4, Anti-Submarine Bomb (Army)
25/40	BOMB H.E. AIRCRAFT 250 KG	- Type 92
25/45	BOMB H.E. AIRCRAFT 250 KG.	- Type 1
25/50	BOMB H.E. AIRCRAFT 250 KG.	- Type 3, 250 KG. General Use
25/55	BOMB H.E. AIRCRAFT 250 KG.	- Type 3, No. 25, Mark 8 Model 1
25/60	BOMB H.E. AIRCRAFT 250 KG.	- Type 3, 250 KG Skipping Model Bomb
25/65	BOMB H.E. AIRCRAFT 250 KG.	- Type 3, No. 25, Mark 31 Model 1
25/70	BOMB H.E. AIRCRAFT 250 KG.	- Type 4, 250 KG Skipping Bomb

TALPO.IT
TALPO.IT
TALPO.IT

INDEX

LEAFLET NO.	SUBJECT	
10/20	BOMB H.E. AIRCRAFT 100 KG	- Type 3
10/30	BOMB H.E. AIRCRAFT 100 KG	- Type 3, 100 KG Skipping Model Bomb
10/35	BOMB H.E. AIRCRAFT 100 KG	- Type 4, 100 KG Skipping Bomb
20/60	BOMB, H.E. A.R. AIRCRAFT 200 KG.	- Experimental, 200 KG. A.R. Bomb
25/00	BOMB H.E. AIRCRAFT 250 KG	- Type , No. 25, Land Mod. 1
25/05	BOMB H.E. AIRCRAFT 250 KG	- Type 98, No. 25, Land
25/10	BOMB H.E. AIRCRAFT 250 KG	- Experimental, Type 18 Mark 26, No. 25.
25/20	BOMB H.E. AIRCRAFT 250 KG	- Type No. 25, Ordinary Model 2.
25/25	BOMB H.E. AIRCRAFT 250 KG	- Type 99, No. 25, Ordinary (Navy) Type 4, Anti-Vessel Bomb (Army)
25/30	BOMB H.E. AIRCRAFT 250 KG	- Type 1, Mark 3, No. 25
25/35	BOMB H.E. AIRCRAFT 250 KG	- Type 1, Mark 2, No. 25, Model 1, Mod. 1 (Navy) Type 4, Anti-Submarine Bomb (Army)
25/40	BOMB H.E. AIRCRAFT 250 KG	- Type 92
25/45	BOMB H.E. AIRCRAFT 250 KG.	- Type
25/50	BOMB H.E. AIRCRAFT 250 KG.	- Type 3, 250 KG. General Use
25/55	BOMB H.E. AIRCRAFT 250 KG.	- Type 3, No. 25, Mark 8 Model 1
25/60	BOMB H.E. AIRCRAFT 250 KG.	- Type 3, 250 KG Skipping Model Bomb
25/65	BOMB H.E. AIRCRAFT 250 KG.	- Type 3, No. 25, Mark 31 Model 1
25/70	BOMB H.E. AIRCRAFT 250 KG.	- Type 4, 250 KG Skipping Bomb

TALPO.IT

BOMB H.E. AIRCRAFT - 50 KG.

1. JAPANESE NOMENCLATURE

Type 94

2. BRANCH OF SERVICE

Army Air Force

3. USE

General purposes.

4. FUZING

Nose A. 2 (A) A. 2 (B), A. 2 (C), A. 2 (A), D. 5 (A)
Tail B. 1 (A), B. 1 (B)

The following fuze is now used, but to date no specimens have been recovered.

Type 3 Tail Fuze.

5. DETAILS

Height Overall.....3'6 3/8"
Length of body.....2'0 1/8"
Diameter.....1/8"
Width diagonally across tail fins.....9 3/4"
Wall thickness.....9/32"
Weight complete.....100lbs.
Weight of filling.....42lbs.
Main filling.....3 cast picric blocks (Lyddite) wrapped in waxed paper and beeswax and seperated by cardboard discs.
Colour.....Black
Markings.....Red band around nose. Yellow and white bands around body. 50 KG stencilled on body.

6. DESCRIPTION

(a) See drawing.

(b) The bomb conissts of a cylindrical steel body, to which is screwed a cast steel nose. The nose is prevented from unscrewing by means of a grub screw. A conical shaped tail unit with four fins and stabilisers is welded to the other end of the body. To the apex of the tail cone is welded an adaptor, screwed internally to receive a fuze. A hinged suspension lug is rivetted at the point of balance.

7. ACTION

Depending on fuze selection.

8. DISPOSAL PROCEDURE

When demolition in situ is impracticable, render the fuze safe, and remove to a suitable area for disposal.

9. SPECIAL PRECAUTIONS

TALPO.IT

A.C.D. . 155	LEAFLET NO. 5/00	SECTION NO. 5

BOMB H.E. AIRCRAFT ARMY 50 K.G.

TYPE 94

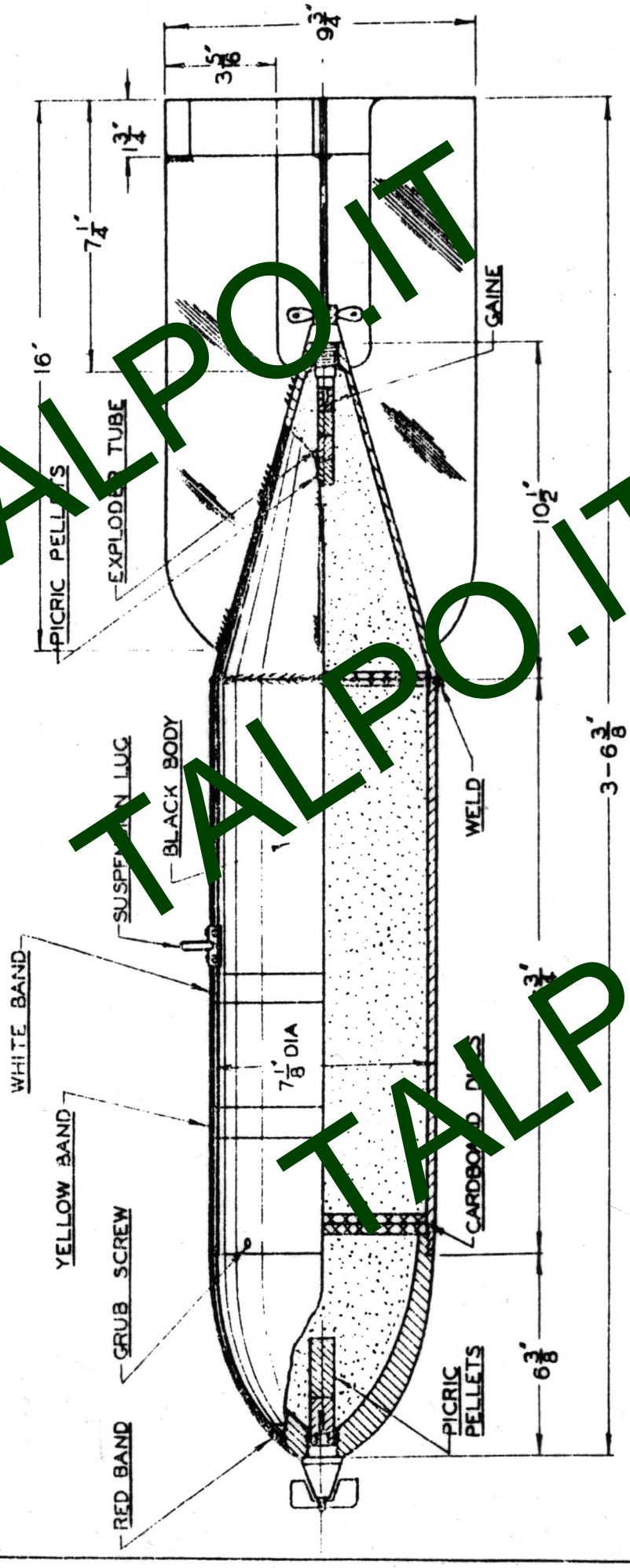

TALPO.IT
TALPO.IT
TALPO.IT

BOMB H.E. AIRCRAFT 50 KG

1. JAPANESE NOMENCLATURE

Type 94 (modified)

2. BRANCH OF SERVICE

Army Air Force

3. USE

To impede operations and neutralise [redacted] airfields.

4. FUZING

Nose C. 3 (A)
Tail B. 1 (A), B. 1 (B) (When C. 3 (A) is not fitted in nose).

5. DETAILS

Length Overall	3' 3 1/2"
Length of body	1' 11 1/4"
Diameter	7 1/8"
Width diagonally across tail fins	9 3/4"
Wall thickness	9/32"
Weight complete	100 lbs.
Weight of filling	43 lbs.
Main filling	
Colour	Black
Markings	One yellow band and one white band on the body. Red band on nose tip.

6. DESCRIPTION

(a) See drawing.

(b) This bomb is identical in construction to the type 94 - 50 KG bomb described in Section No. 5 Leaflet 5/00 excepting that the nose piece has been modified to receive the C. 3 (A) fuze and a resistance plate is welded over the end of the tail fins.

7. ACTION

On impact the Fuze C. 3 (A) will become armed and initiate the bomb after an indeterminate delay period..

8. DISPOSAL PROCEDURE

(a) Unscrew the nose cap of the C. 3 (A) fuze and determine whether the fuze is armed.

(b) When demolition in situ is impracticable, the bomb must be immediately removed to a suitable area or trench pending the expiry of the safety period of 125 hours.

9. PRECAUTIONS

TALPO.IT TALPO.IT TALPO.IT

BOMB H.E. AIRCRAFT ARMY 50 K.G

TYPE 94 (MODIFIED)

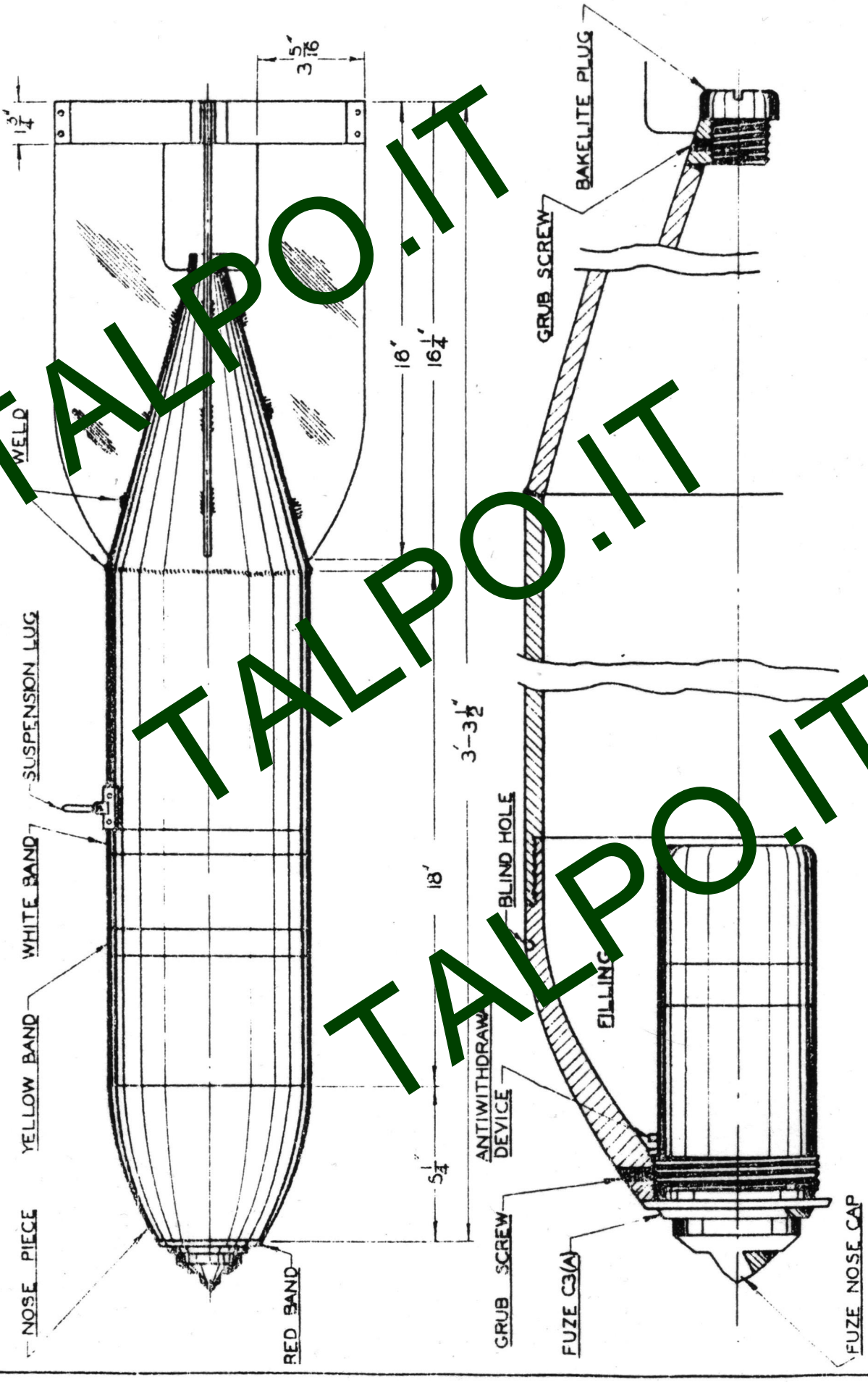

TALPO.IT
TALPO.IT
TALPO.IT

BOMB H.E. AIRCRAFT - 50 KG

1. JAPANESE NOMENCLATURE

Type 1.

2. BRANCH OF SERVICE

Army Air Force

3. USE

Temporary neutralisation of airfields and cities.

4. FUZING

Nose C. 3 (A)
Tail E. 1 (A)

5. DETAILS

Length Overall.....
Length of body.....
Diameter.....
Width diagonally across tail fins.....
Wall thickness.....
Weight complete.....
Weight of filling.....
Main filling.....
Colour.....
Markingss.....
.....
.....
.....
.....

6. DESCRIPTION

No information available, but dimensions probably identical with type 94, excepting overall length, which is assumed one inch shorter.

7. ACTION

Functions after an indeterminate long delay period.

8. DISPOSAL PROCEDURE

(a) Remove nose cap of C. 3 (A) fuze and determine whether fuze is armed.

(b) When demolition in situ is impracticable remove the bomb to a suitable area or trench pending the expiry of the safety period of 125 hours.

9. SPECIAL PRECAUTIONS

TALPO.IT TALPO.IT TALPO.IT

BOMB, H.E. AIRCRAFT - 50 KG.

- JAPANESE NOMENCLATURE

Type 3

- BRANCH OF SERVICE

Army Air Force

- USE

General purpose - Low level attacks and air to air bombing, depending upon fuzing.

4. FUZING

Nose - A. 2 (A), A. 2 (B), A. 2 (C), A. 2 (D), D. 5 (A)
Tail - B. 1 (A), B. 1 (B).
Tail B. 7 (A) when used as a substitute anti-submarine bomb.

5. DETAILS

Length overall.....
Length of body.....
Diameter.....
Width diagonally across tail fins....
Wall thickness.....
Weight complete.....
Weight of filling.....
Main filling.....
Colour.....
Markings.....

6. DESCRIPTION

Not available.

7. ACTION

Functions instantaneously, with short delay or as an aerial burst-bomb depending upon fuzing selected.

8. DISPOSAL PROCEDURE

When demolition in situ is impracticable, render the fuzes safe and remove to a suitable area for disposal.

9. SPECIAL PRECAUTIONS

TALPO.IT

BOMB H.E. AIRCRAFT - 60 KG, TYPE 97.

1. **JAPANESE NOMENCLATURE**

Type 97, No. 6 Land, Modification 1.

2. **BRANCH OF SERVICE**

Navy Air Force

3. **USE**

General purpose bomb for use against land targets.

4. **FUZING**

Nose A. 3 (A)

5. **DETAILS**

Length Overall	3' 4"
Length of body	1' 9 7/8"
Diameter	7 7/8"
Width diagonally across tail fins	10 3/4"
Wall thickness	5/32"
Weight complete	126 lbs.
Weight of filling	50 lbs.
Main filling	Mixture of Hexanite and Anisol or Lyddite.
Colour	Light Grey.
Markings	Blue band around body. Thin red line running longitudinally around bomb. Green band around tail fins. Green band on nose.
New Colour Markings	Green/Brown, Grey, Grey.

6. **DESCRIPTION**

(a) See drawing.

(b) The bomb consists of a cylindrical steel body, to which a cast steel nose is rivetted or spot welded. A conical shaped steel tail piece is provided with four fins, and stabilizer bands, and rivetted to a junction ring which is attached to the other end of the body with screws.

7. **ACTION**

Depending upon gaine selection, will function instantaneously, or with fractional delay.

8. **DISPOSAL PROCEDURE**

When demolition in situ is impracticable, render the fuze safe and remove to a suitable area for disposal.

9. **SPECIAL PRECAUTIONS**

TALPO.IT TALPO.IT TALPO.IT

BOMB. H.E. AIRCRAFT 60 KG.

"TYPE 97 No. 6. LAND. MOD. I."

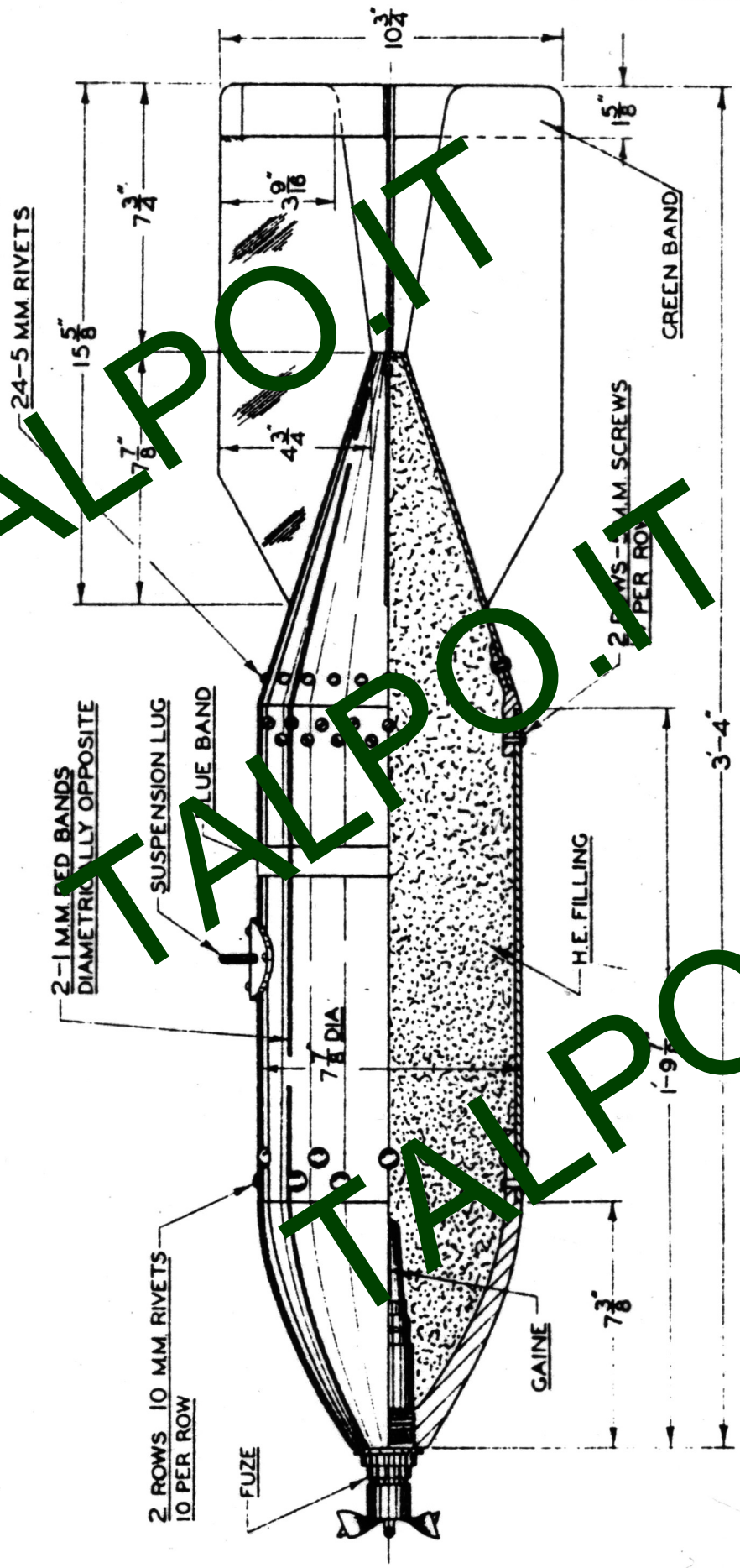

TALPO.IT
TALPO.IT
TALPO.IT

FUZE. BOMB. NOSE. INSTANTANEOUS.

TYPE 3. SMALL BOMB NOSE FUZE.

A6.(A)

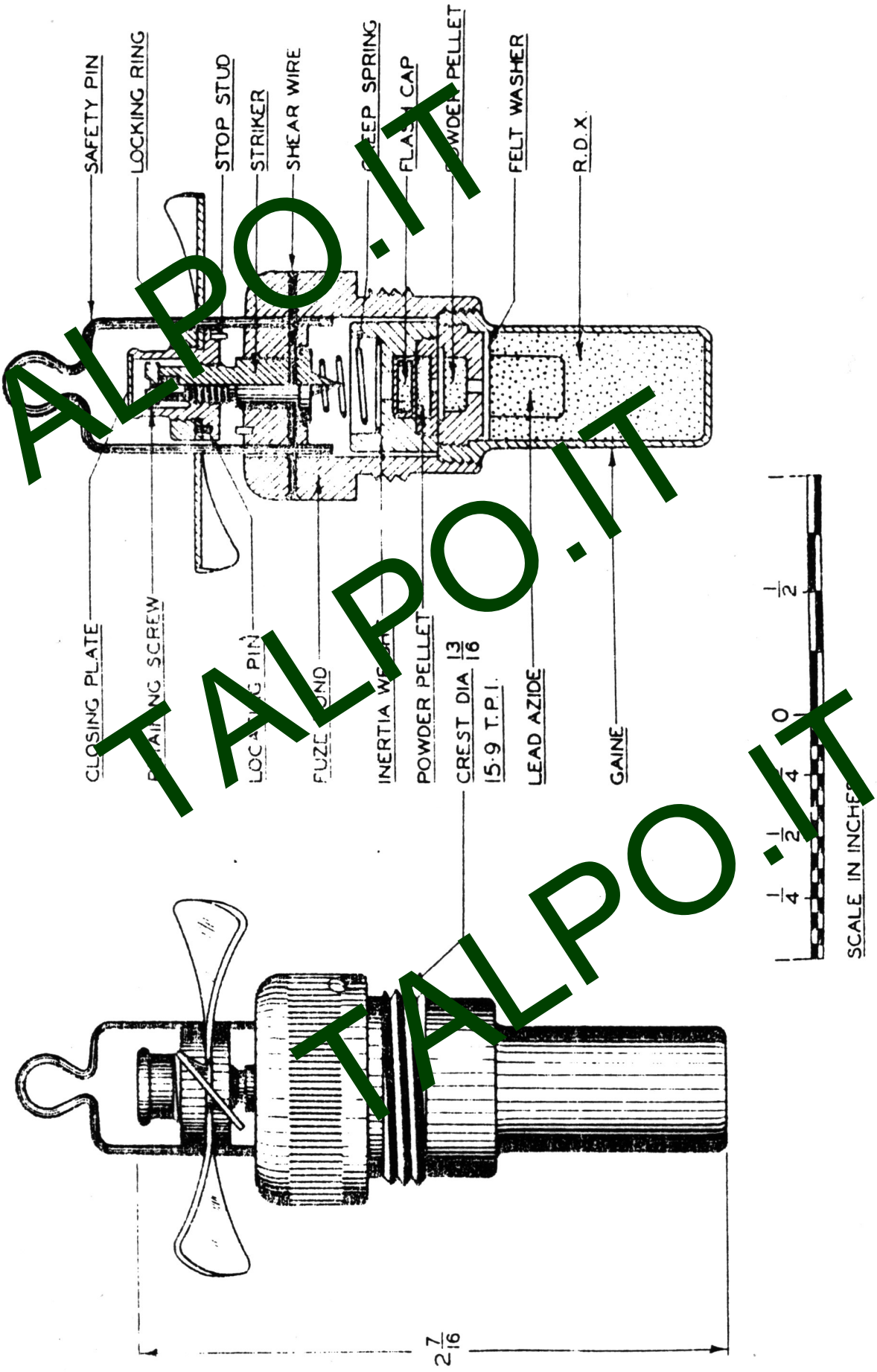

TALPO.IT
TALPO.IT
TALPO.IT

FUZE, BOMB, TAIL.— INSTANTANEOUS OR DELAY.

TYPE 15, MODEL 1, MOD'F'N. 2, TAIL ARMING MECHANISM

B 3 (B).

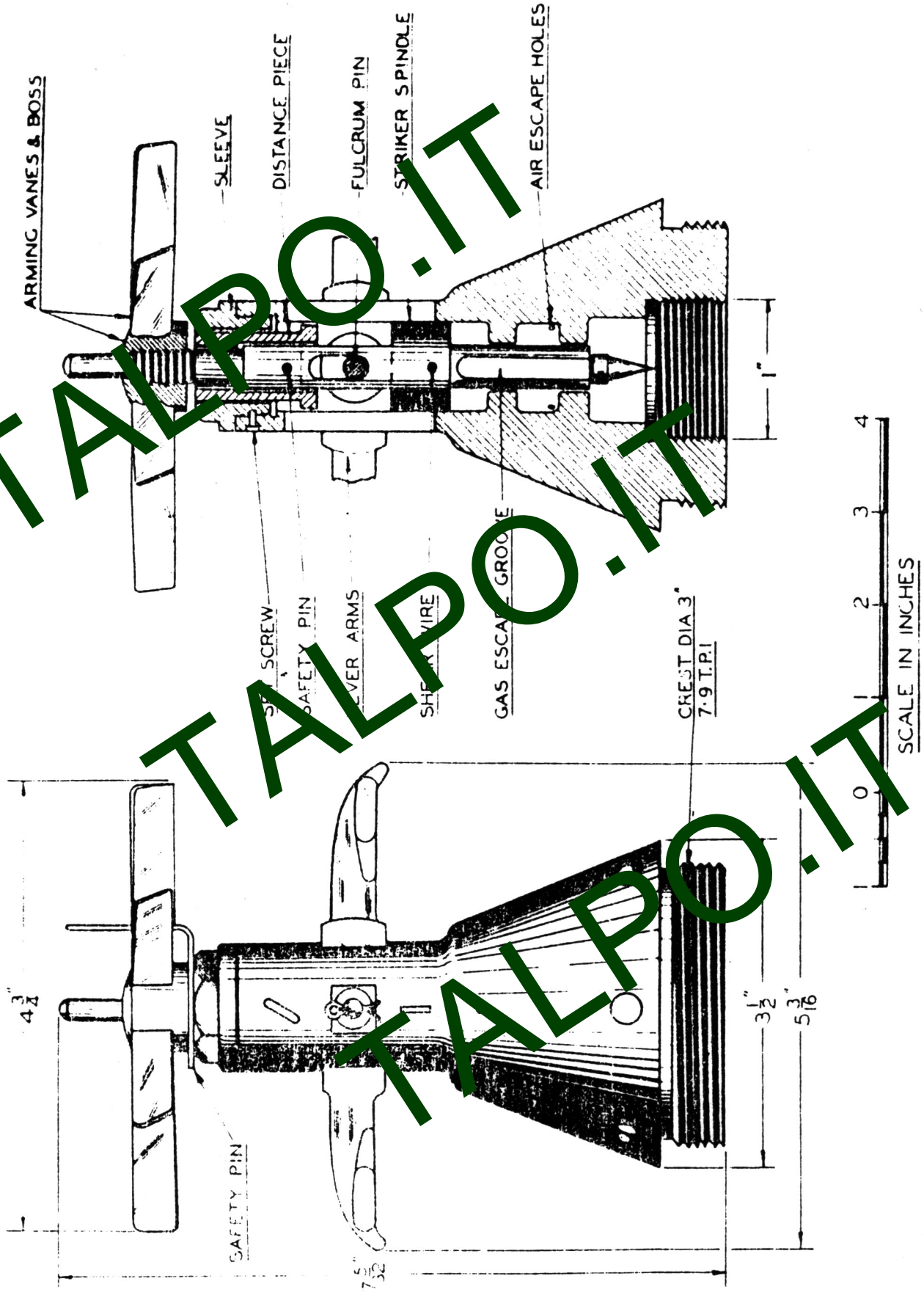

TALPO.IT
TALPO.IT
TALPO.IT

A.C.D. 155.	LEAFLET No.6/02	SECTION No.14

FUZE. BOMB. NOSE. INSTANTANEOUS.

A6. (B)

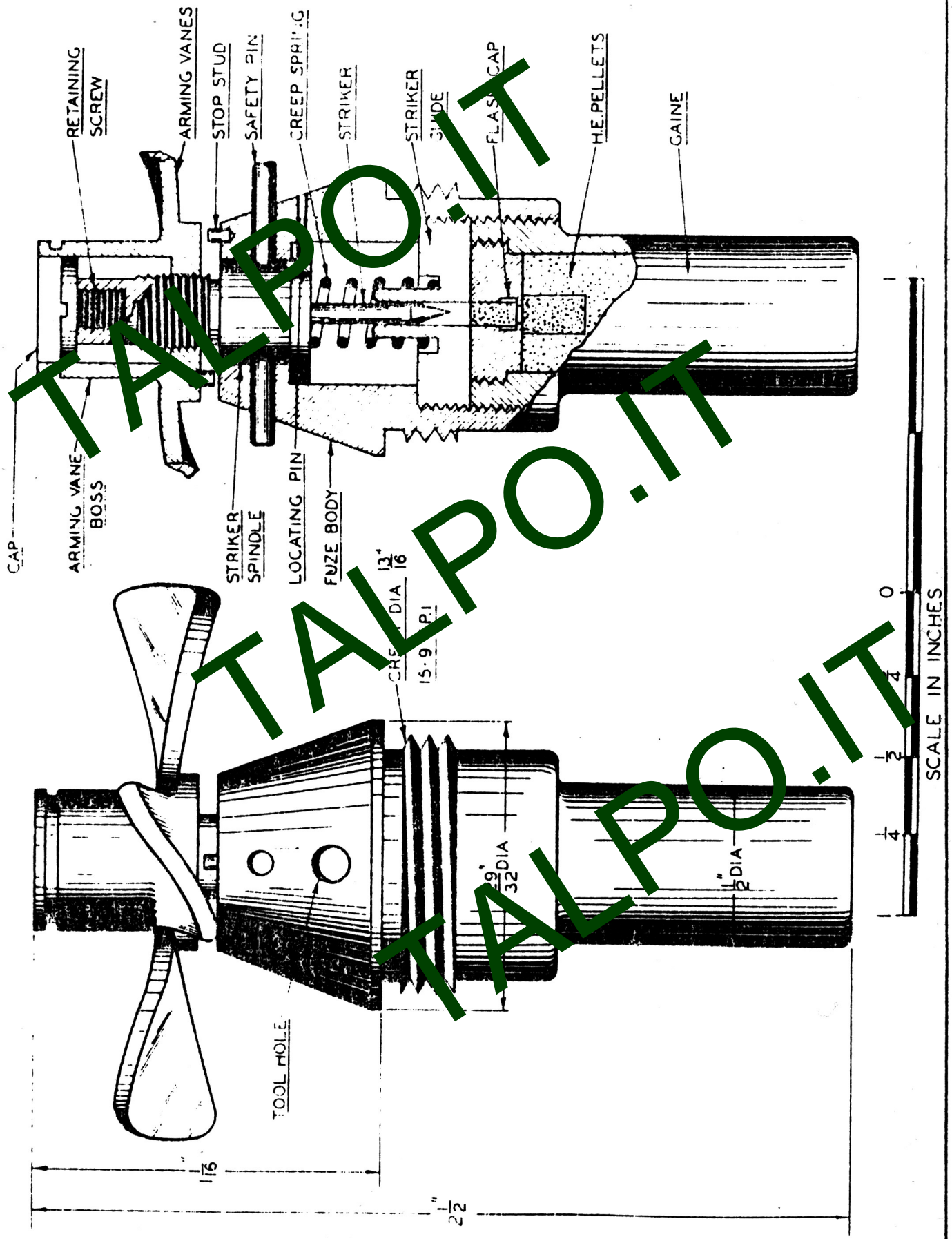

TALPO.IT
TALPO.IT
TALPO.IT

FUZE. BOMB. NOSE. INSTANTANEOUS.

A 7. (A)

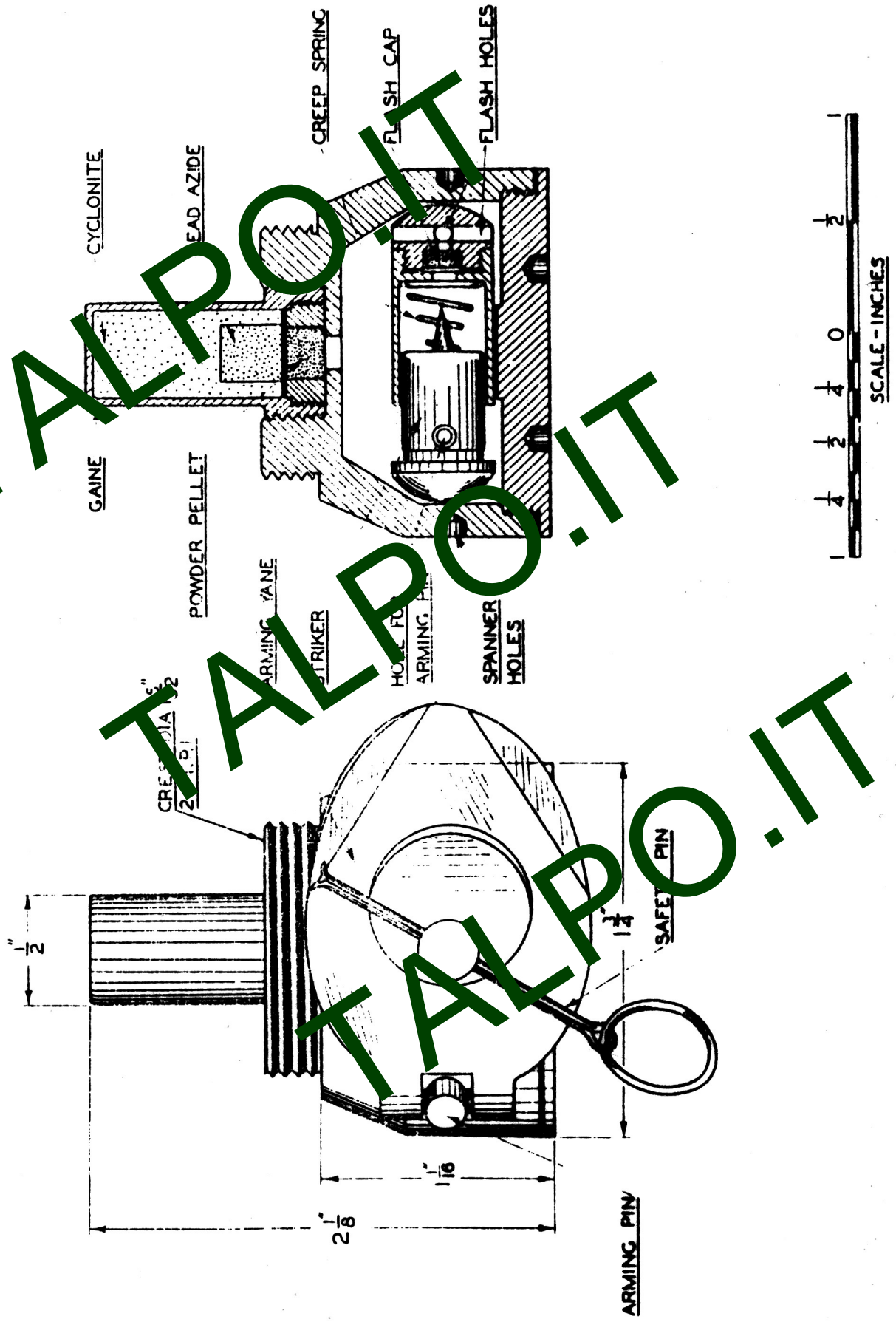

TALPO.IT

FUZE. BOMB NOSE DELAY.

"TYPE 4. 2 SECOND. DELAY NOSE FUZE."

A 8.(A)

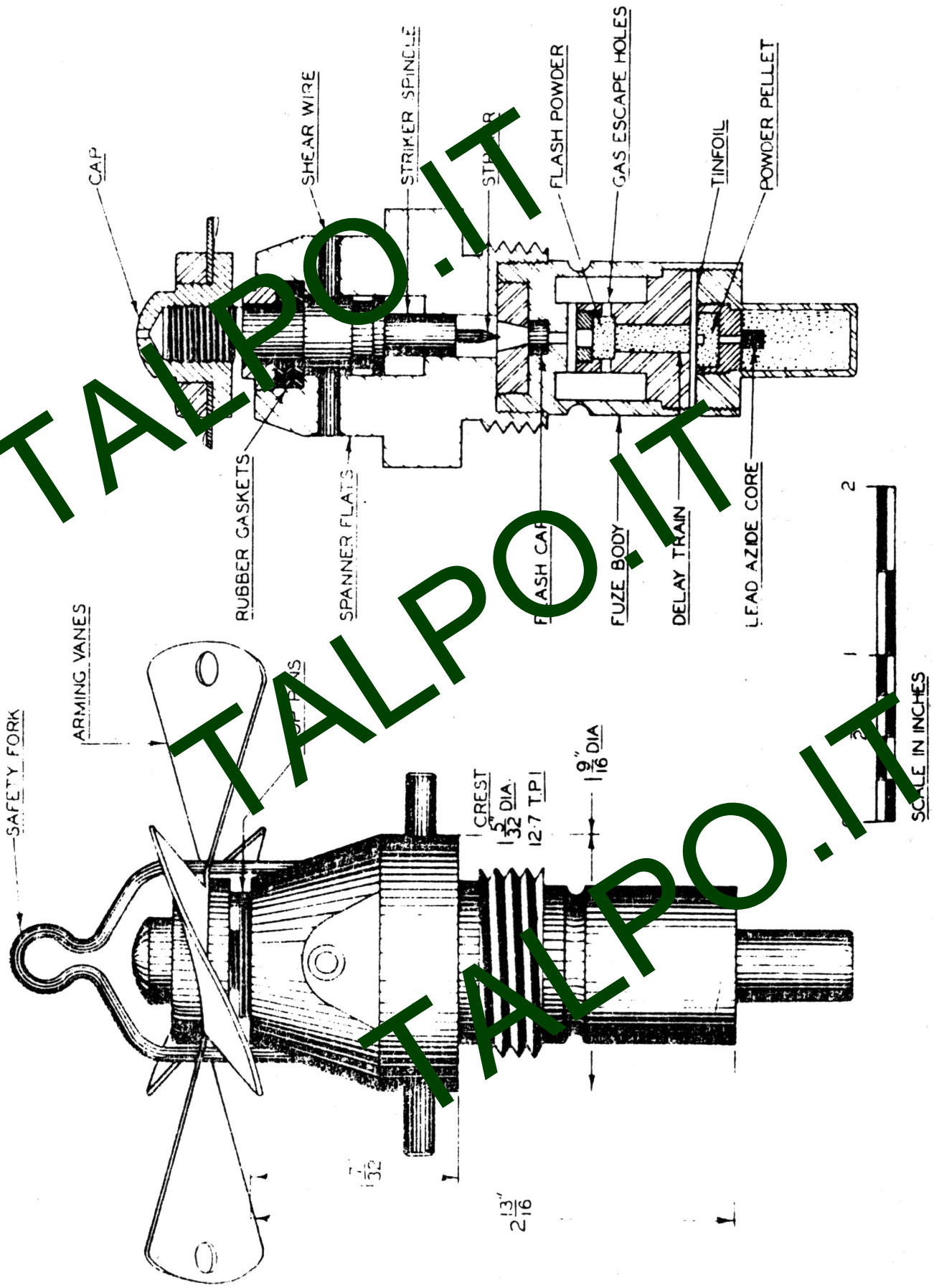

TALPO.IT
TALPO.IT
TALPO.IT

FUZE. BOMB. NOSE. DELAY.

"TYPE 4, 2 SECOND DELAY FUZE FOR LARGE BOMBS."

A8. (B)

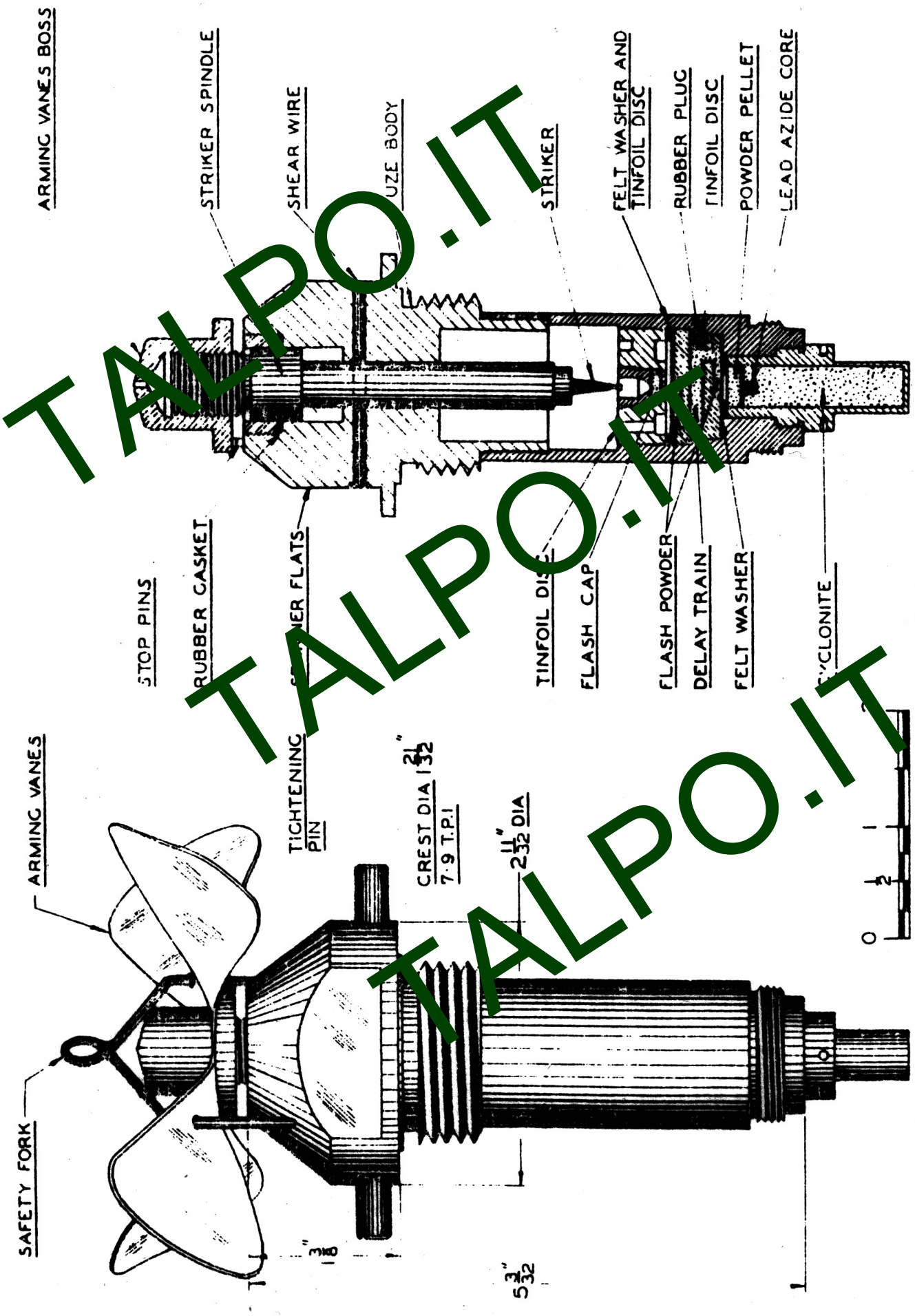

TALPO.IT
TALPO.IT
TALPO.IT

FUZE. BOMB. TAIL. INSTANTANEOUS.

'TYPE 12 YEAR INSTANTANEOUS FUZE'.

B1.(A)

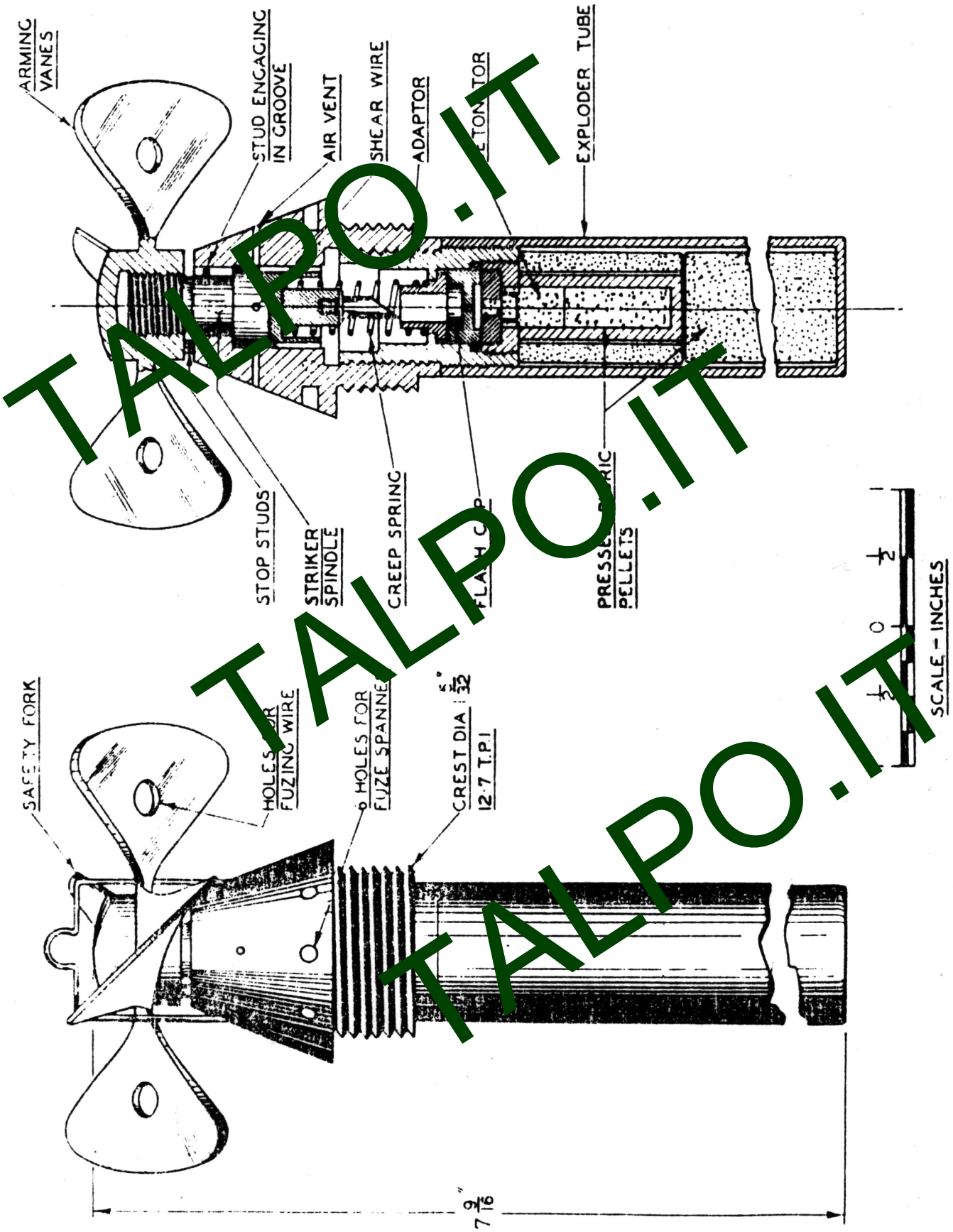

TALPO.IT
TALPO.IT
TALPO.IT

FUZE, BOMB, TAIL, SHORT DELAY

TYPE I. 15 SECOND DELAY TAIL FUZE

B1. (B)

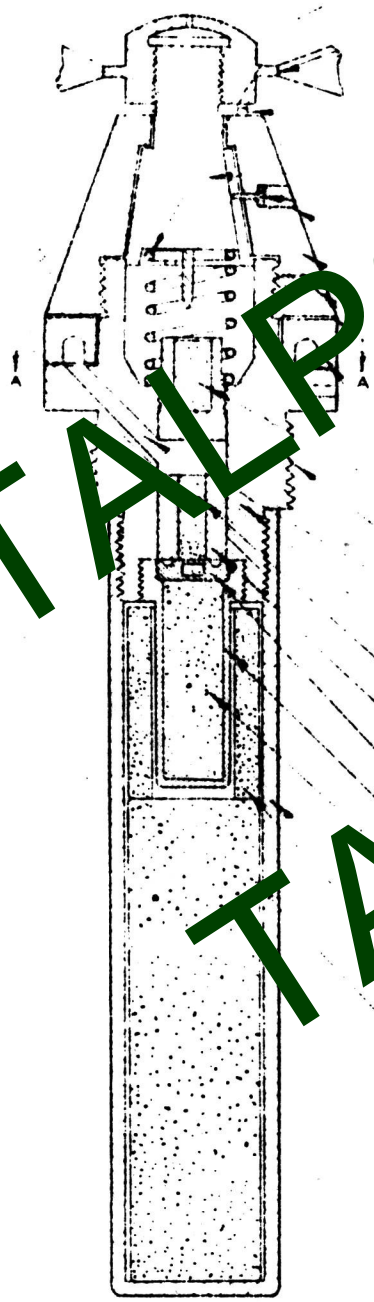

CREEP SPRING
HOLES FOR RECEPTION OF SAFETY FORK
STOP STUDS
STRIKER SPINDLE
GUIDE PIN
LEAD PLUG
UPPER FUZE BODY
GRUB SCREW
SPRING WASHER
FIXED DELAY TIME RING
FLASH CAP
CREST DIA $1\frac{5}{32}$"
FLASH CHANNEL
LOWER FUZE BODY
RELAY POWDER
CONTAINER
DETONATOR
SHORT GAINE
TETRYL
EXPLODER TUBE
PICRIC RING EXPLODER $1 \times \frac{3}{4}$ DIA.
PICRIC EXPLODER $3\frac{3}{4} \times \frac{3}{4}$.

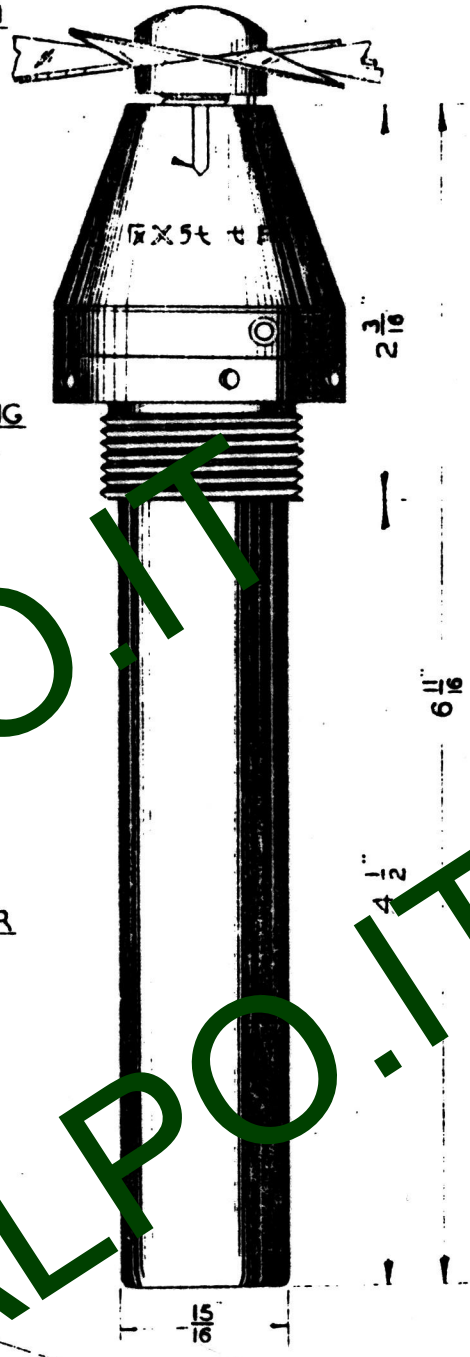

DELAY TRAIN
LOCATING PIN
FLASH HOLE FOR PASSAGE OF FLASH FROM CAP
GAS ESCAPE HOLE COVERED WITH DISC

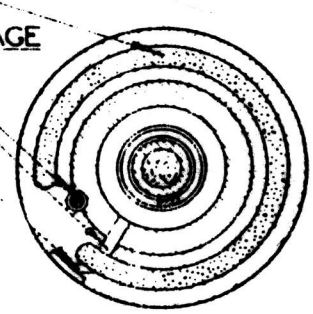

SCALE-INCHES

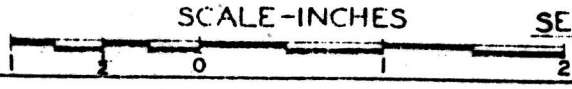

SECTION A-A

TALPO.IT
TALPO.IT
TALPO.IT

FUZE BOMB TAIL (NAVY) INSTANTANEOUS OR DELAY

TYPE 99 TAIL ARMING MECHANISM

B.2 (A)

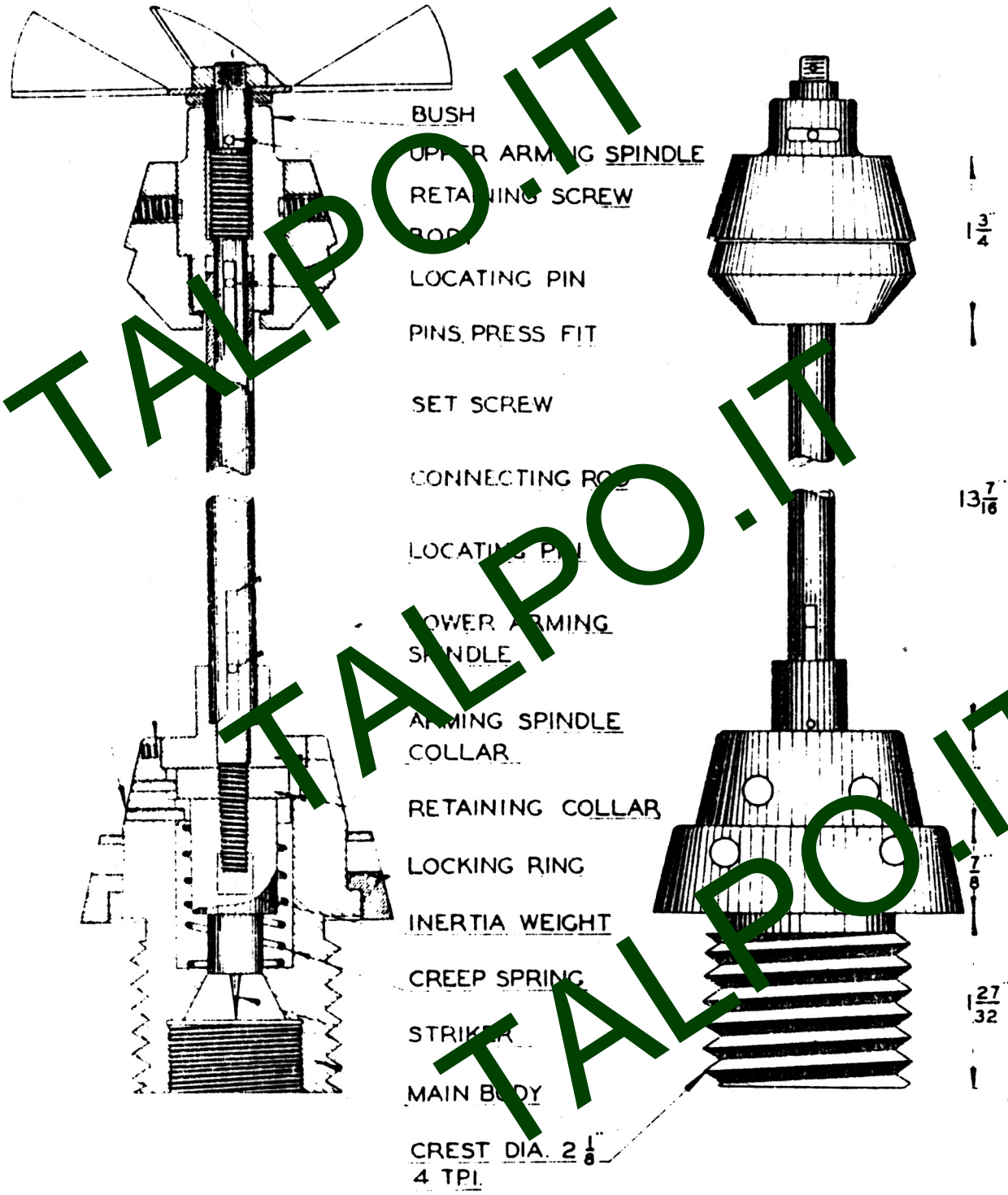

1 0 1 2 3

SCALE – INCHES

TALPO.IT
TALPO.IT
TALPO.IT

FUZE. BOMB. TAIL. INST. OR DELAY.

"TYPE 2. No. 50. ORDINARY TAIL ARMING MECHANISM."

B2.(B)

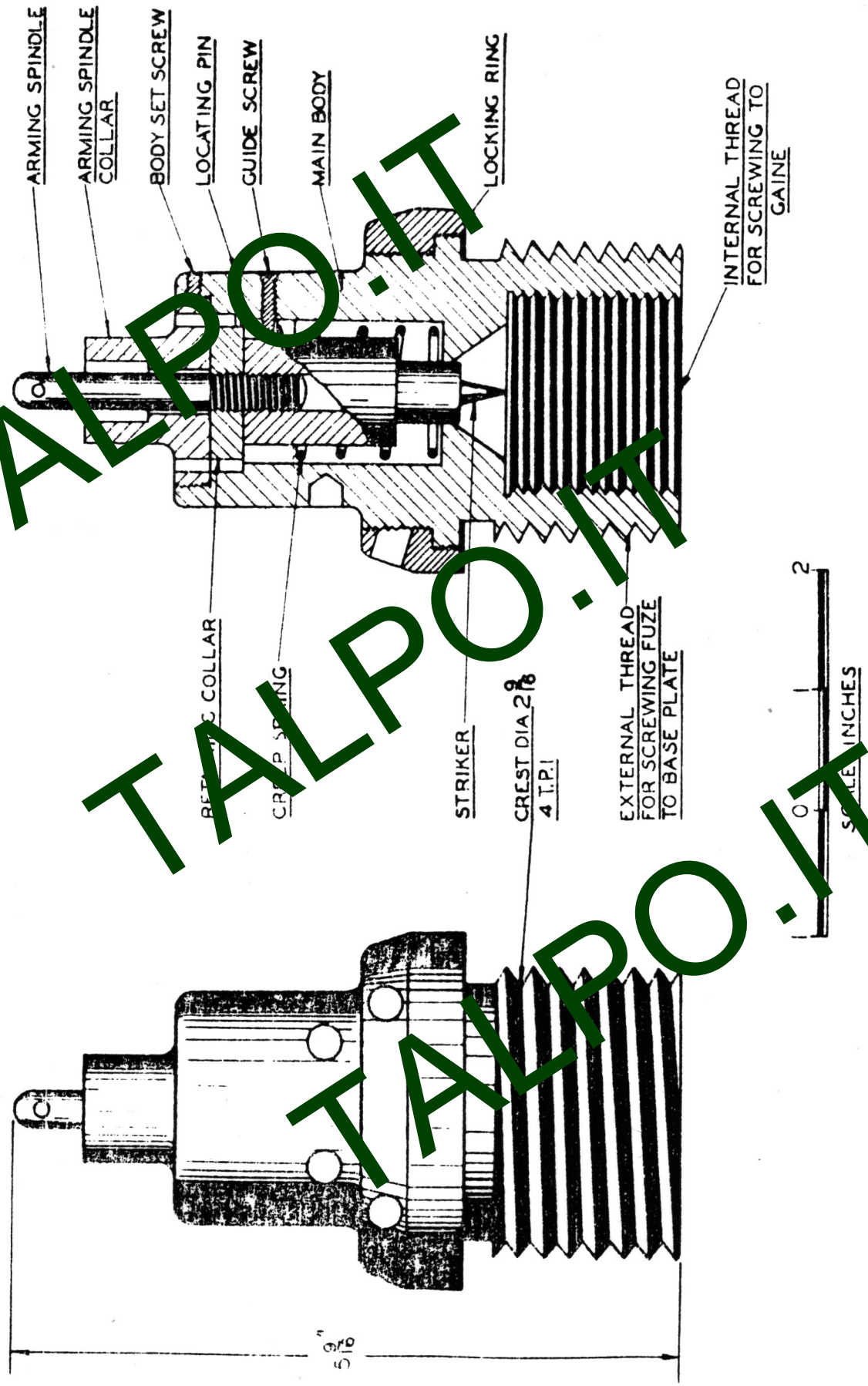

TALPO.IT
TALPO.IT
TALPO.IT

FUZE. BOMB. TAIL. INST. OR DELAY.

"TYPE 15, MODEL 2. MOD. 2. TAIL ARMING MECHANISM."

B3.(A)

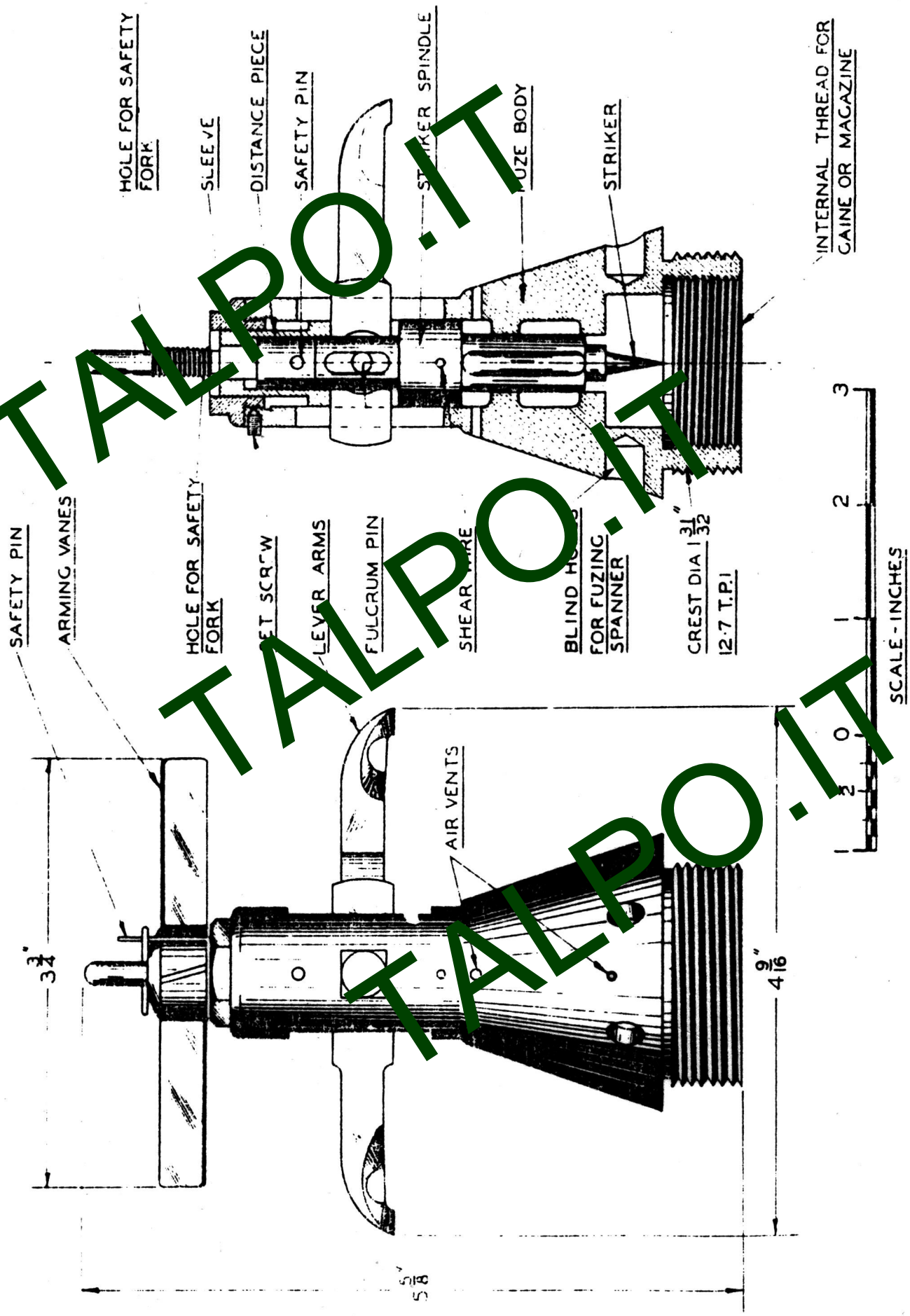

TALPO.IT
TALPO.IT
TALPO.IT

FUZE, BOMB, TAIL — INSTANTANEOUS.

TYPE 92 LARGE BOMB TAIL FUZE

B4(A).

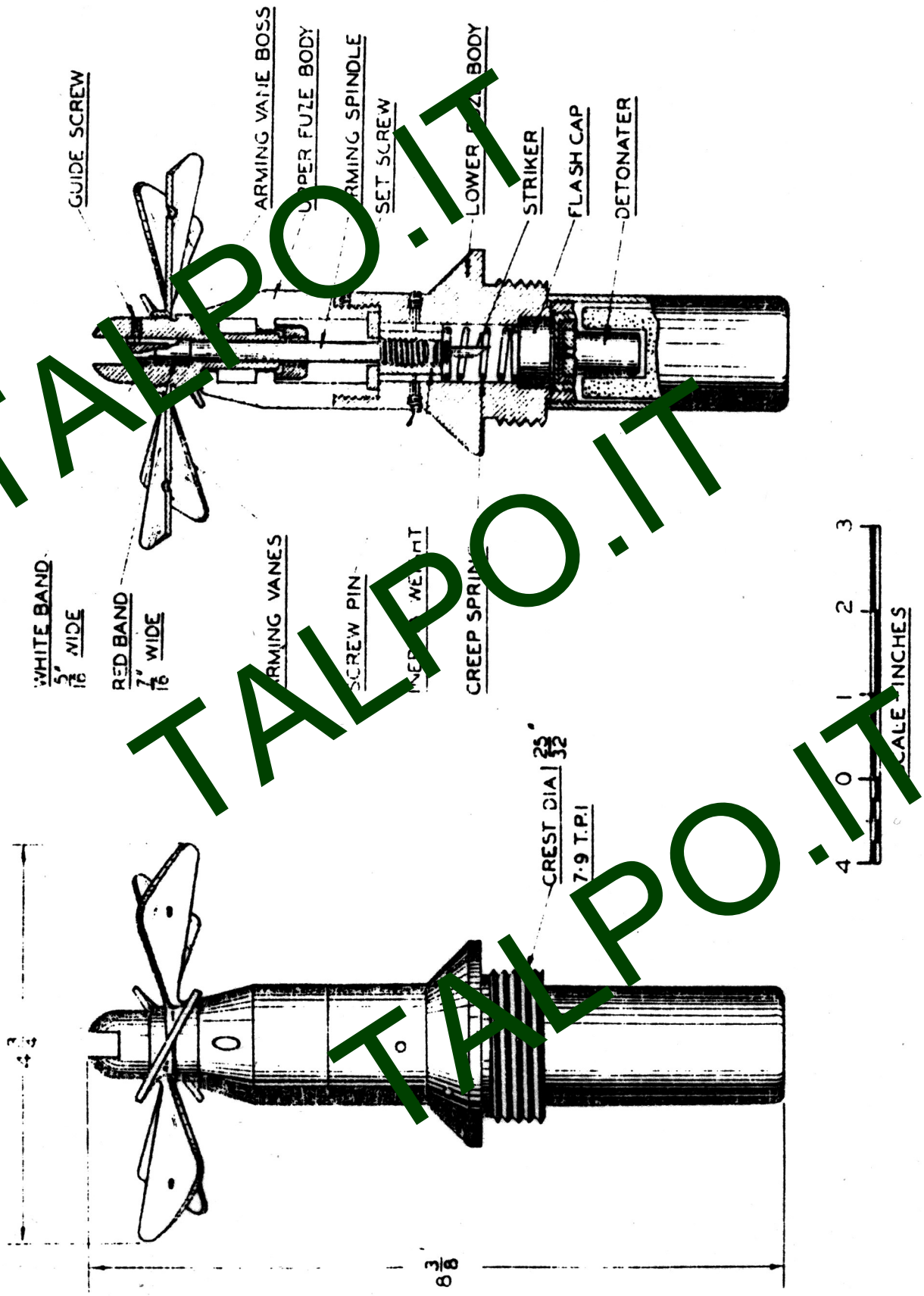

TALPO.IT
TALPO.IT
TALPO.IT

FUZE. BOMB. TAIL. INSTANTANEOUS.

"TYPE 2, SMALL BOMB FUZE."

B 5. (A)

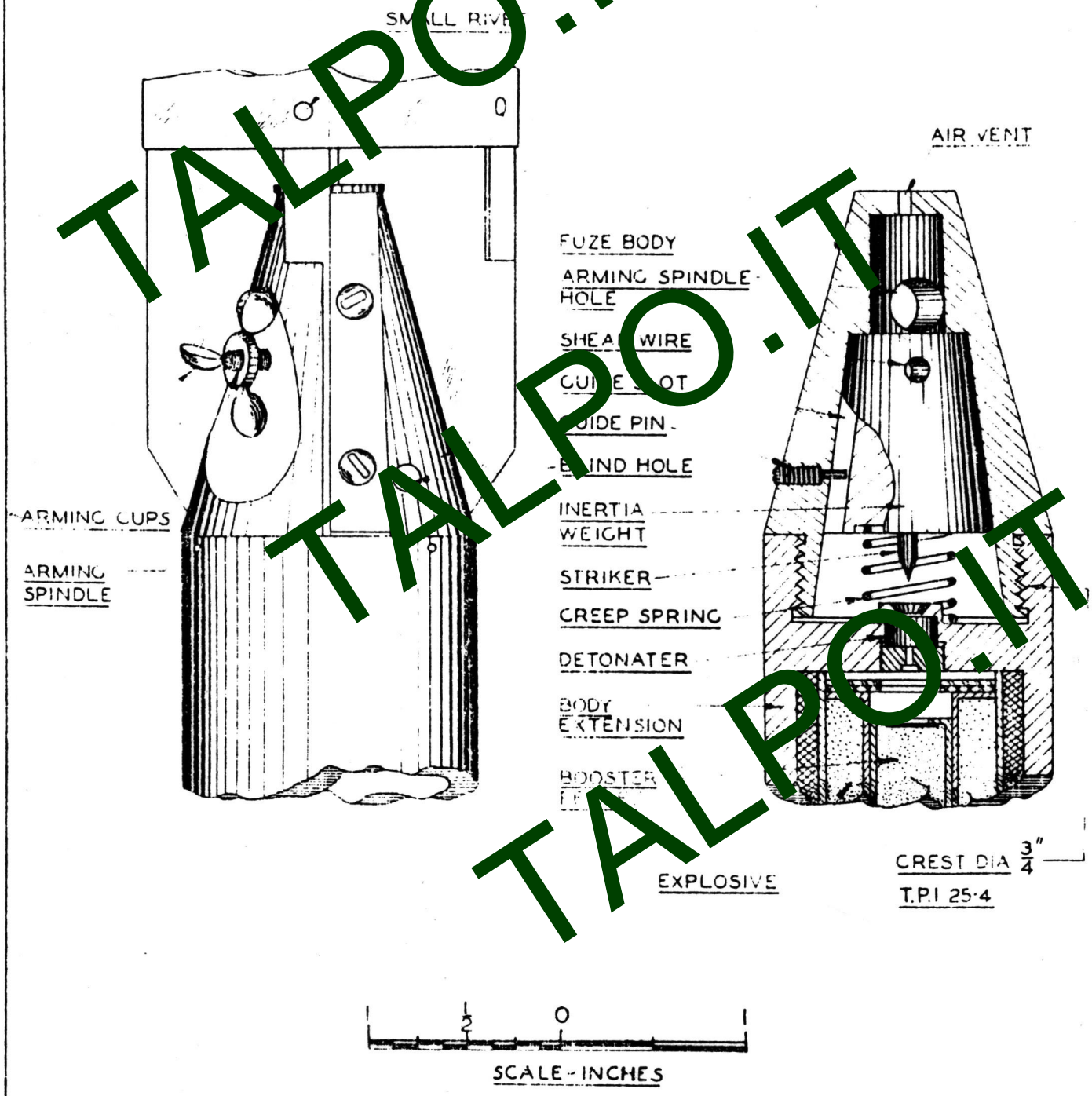

TALPO.IT
TALPO.IT
TALPO.IT

FUZE, BOMB, TAIL, INSTANTANEOUS B 5(B)

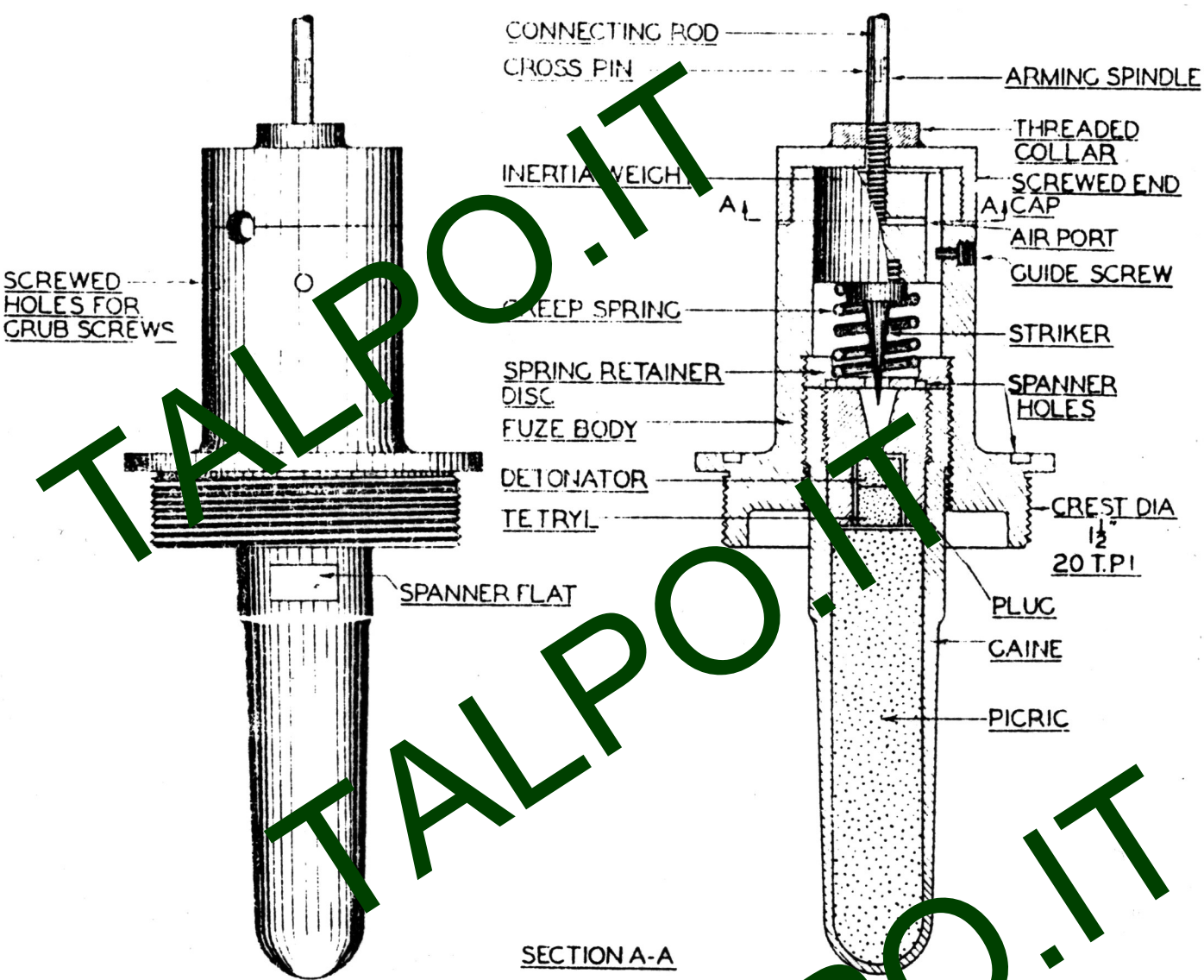

SECTION A-A

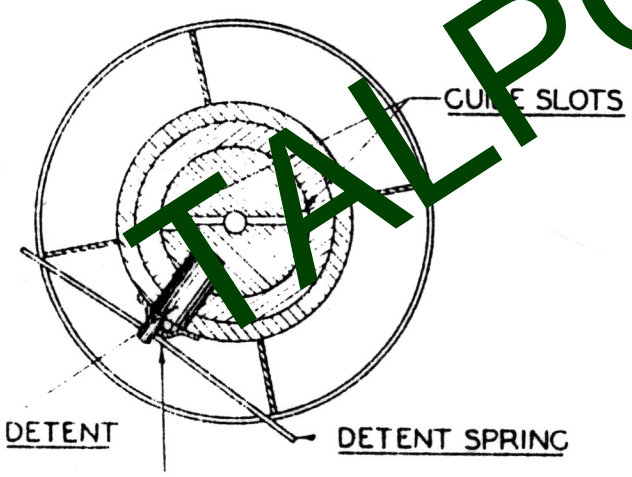

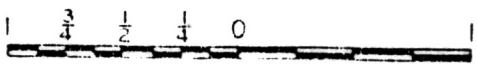

SCALE - INCHES

TALPO.IT

FUZE, BOMB, TAIL, INSTANTANEOUS

B5(C)

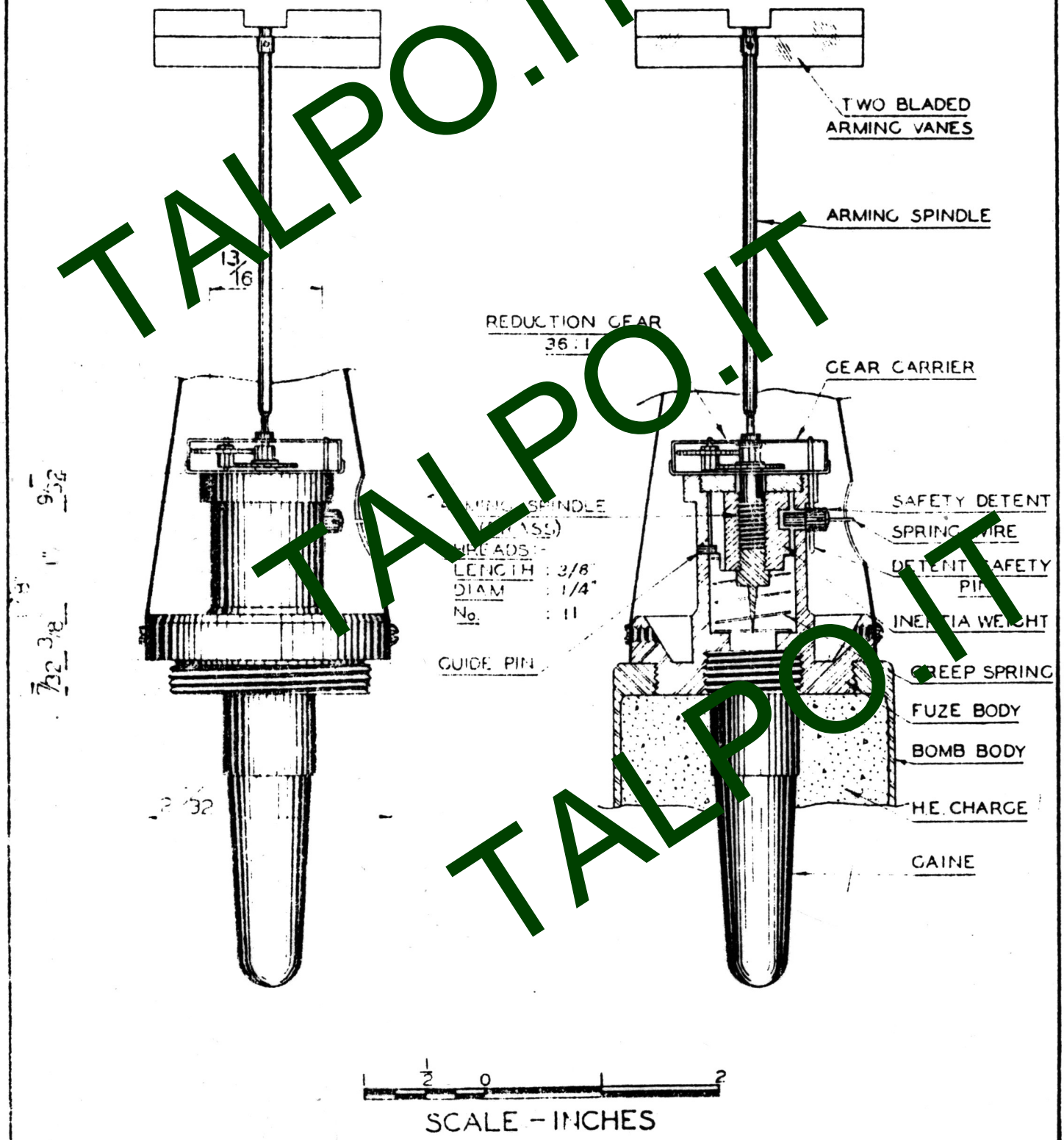

TALPO.IT

FUZE. BOMB. TAIL. INSTANTANEOUS.

TYPE 97 TAIL PRIMING MECHANISM.

B6 (A)

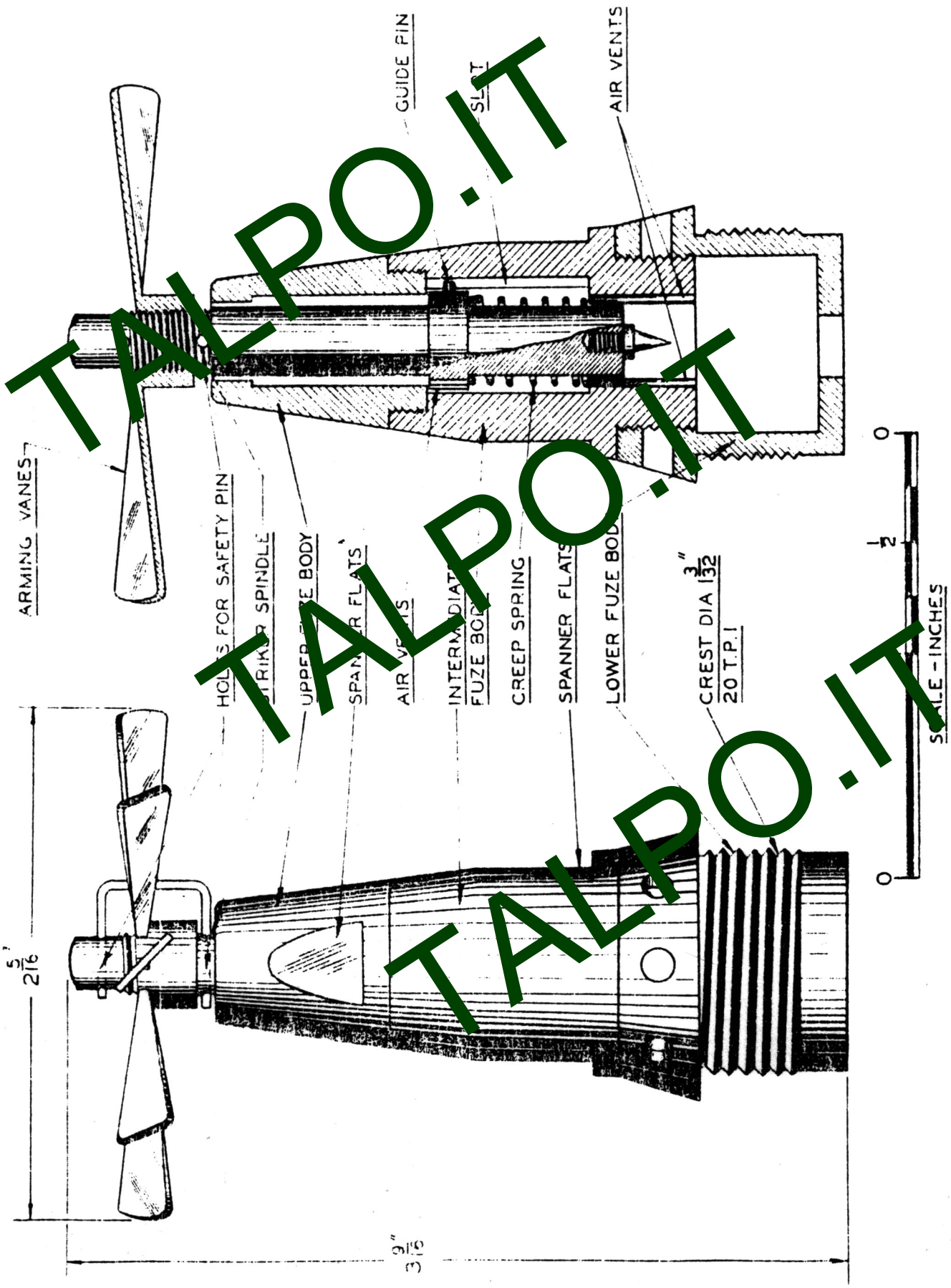

TALPO.IT
TALPO.IT
TALPO.IT

FUZE. BOMB. TAIL. DELAY.

EXPERIMENTAL 3·5 SECOND DELAY ANTI-SUBMARINE FUZE.

B 7.(A)

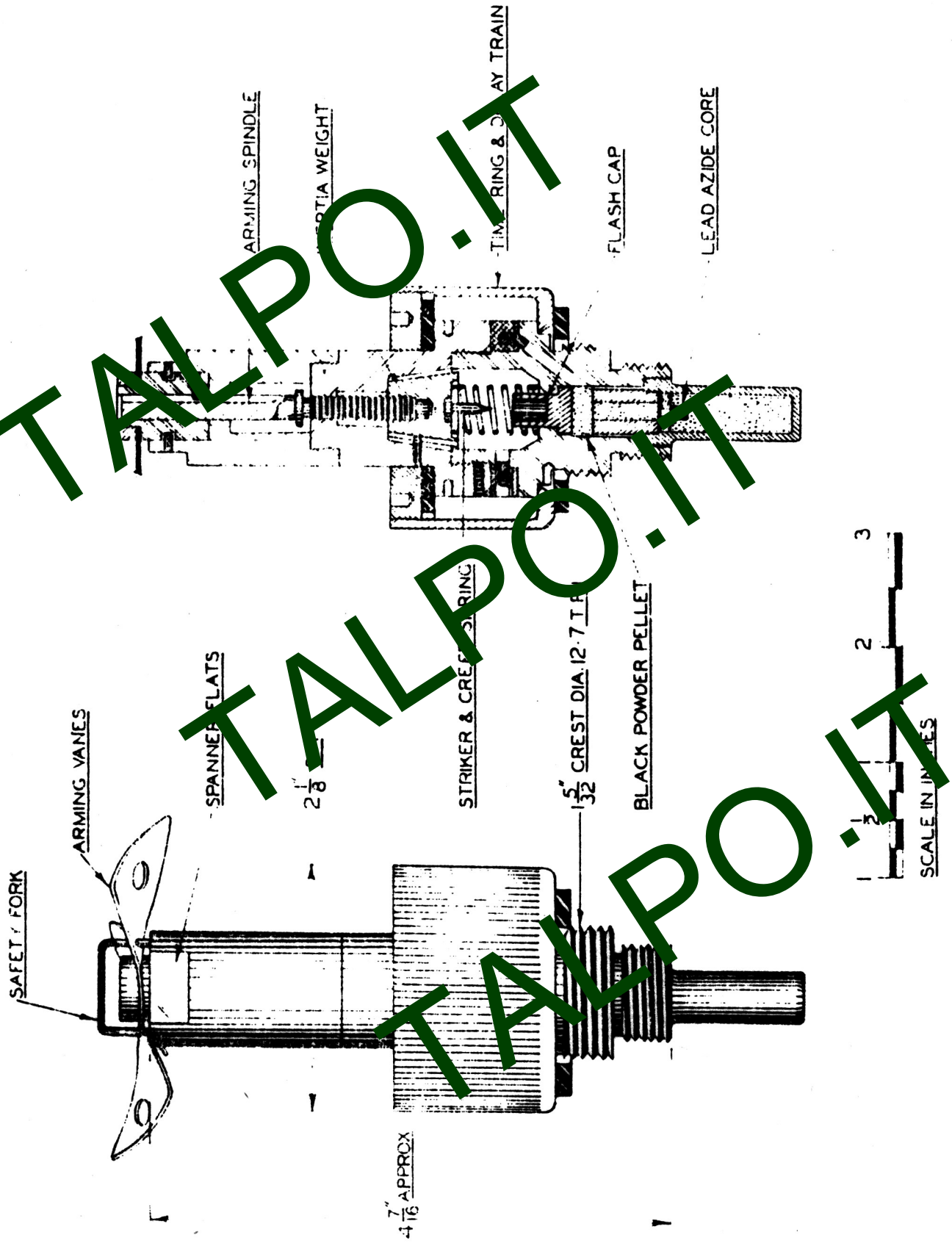

TALPO.IT
TALPO.IT
TALPO.IT

FUZE. BOMB. TAIL. DELAY. (ALL WAYS ACTION)

"TYPE 4, 5 SECOND DELAY FUZE."

B 8. (A)

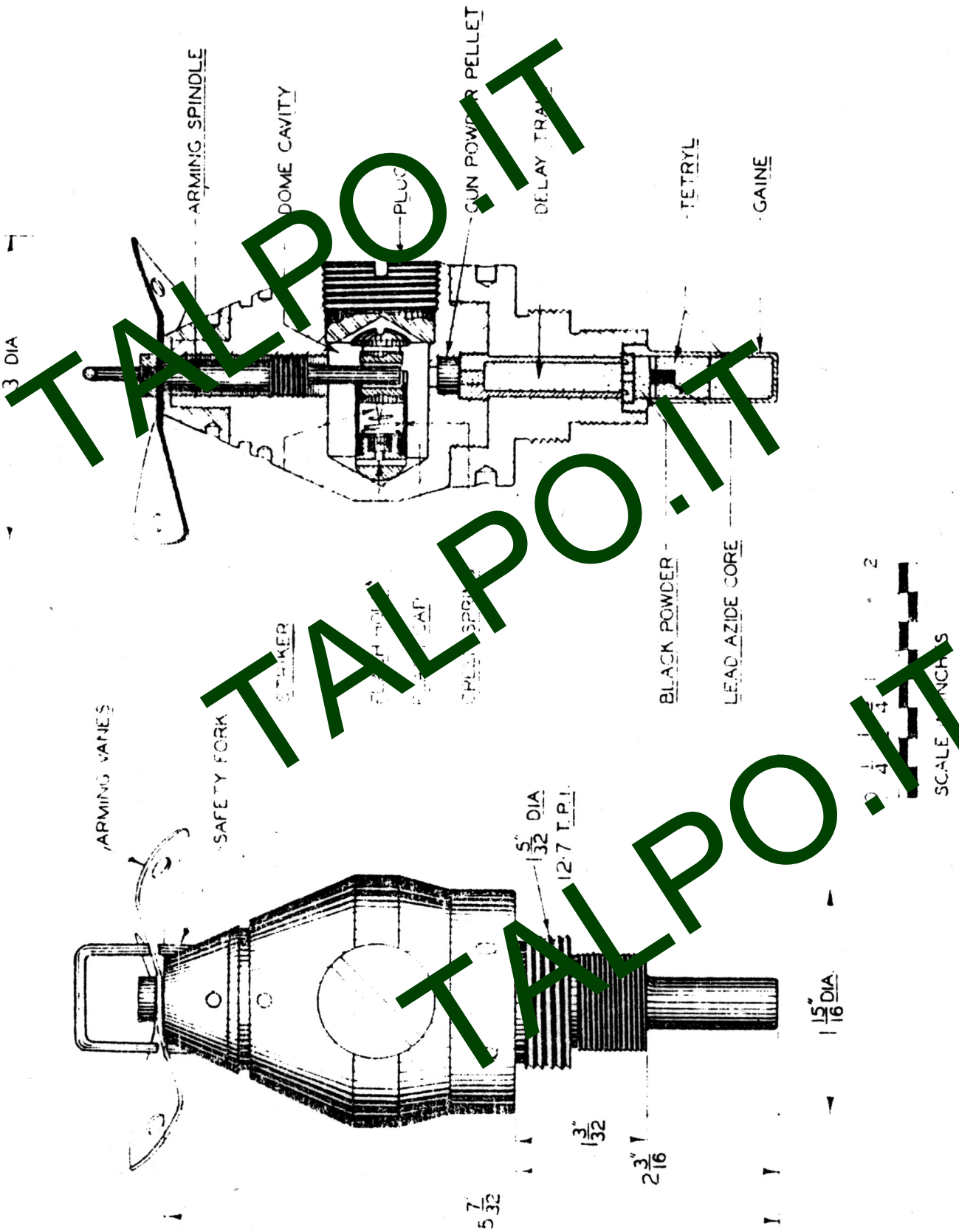

TALPO.IT
TALPO.IT
TALPO.IT

FUZE BOMB NOSE INST. OR DELAY

B 9(A)

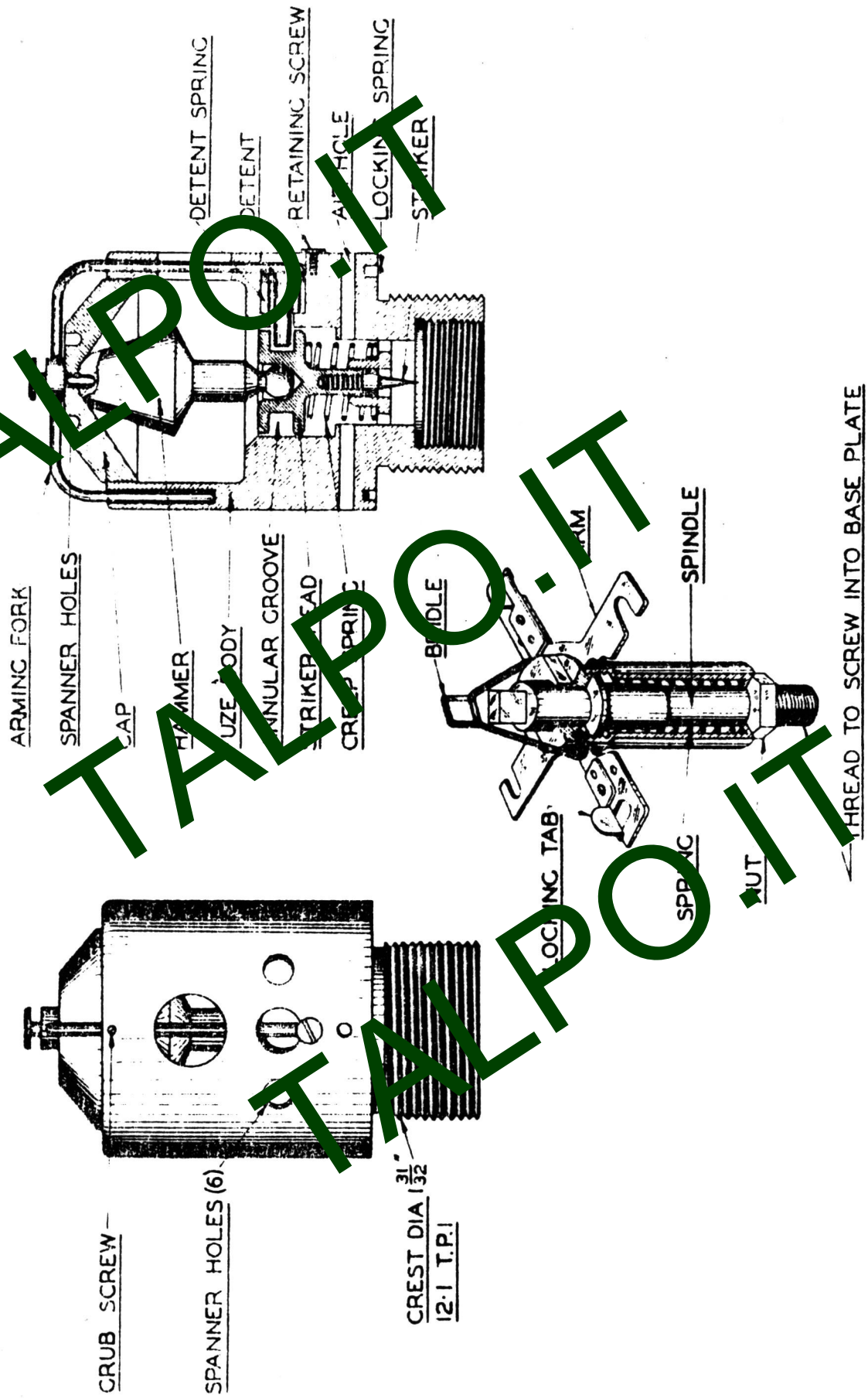

TALPO.IT
TALPO.IT
TALPO.IT

FUZE BOMB NOSE INST. OR DELAY

B10(A)

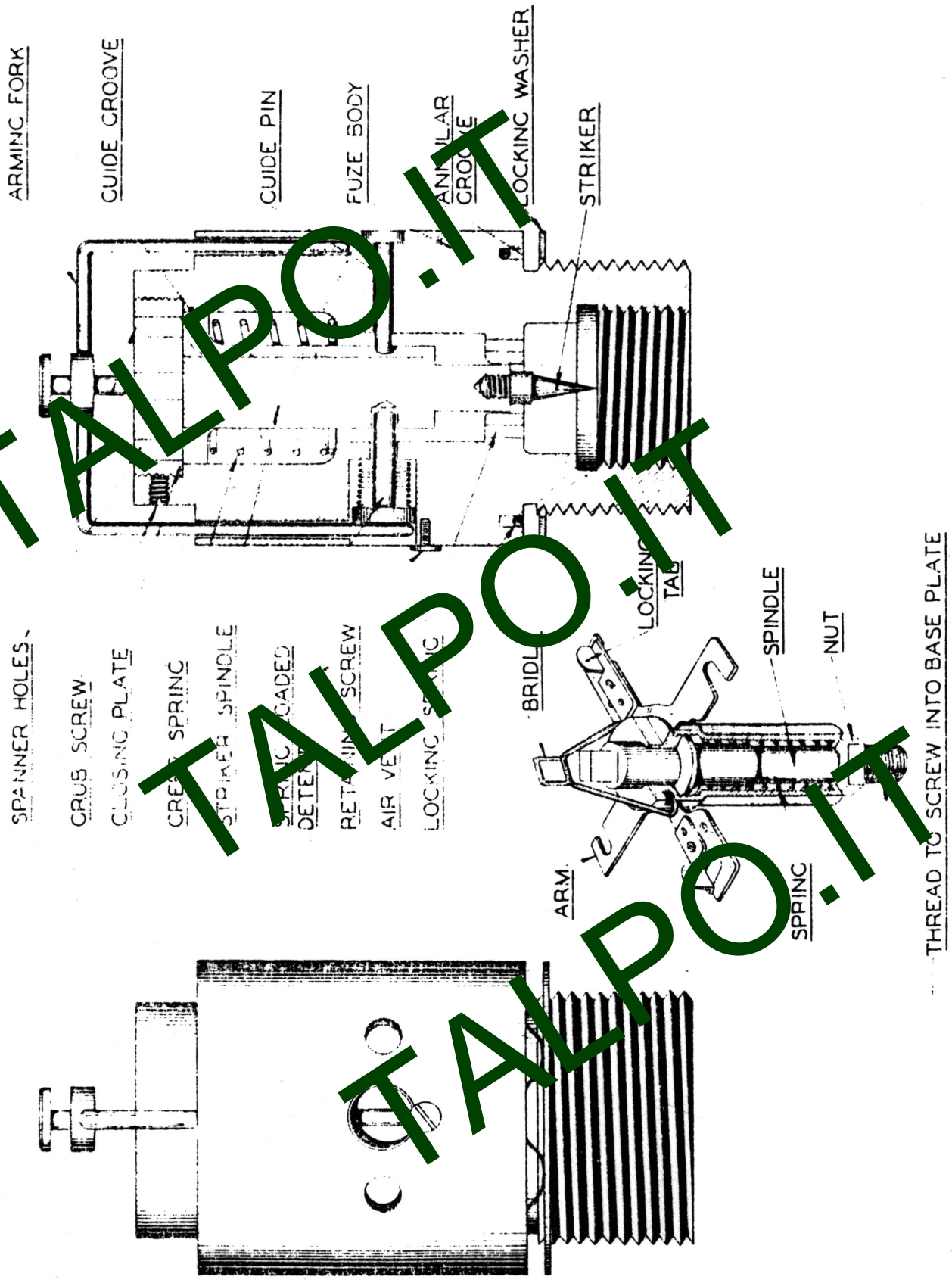

TALPO.IT
TALPO.IT
TALPO.IT

FUZE, BOMB, TAIL. LONG DELAY.

TYPE 99, SPECIAL BOMB TAIL ARMING MECHANISM.

C1(A)

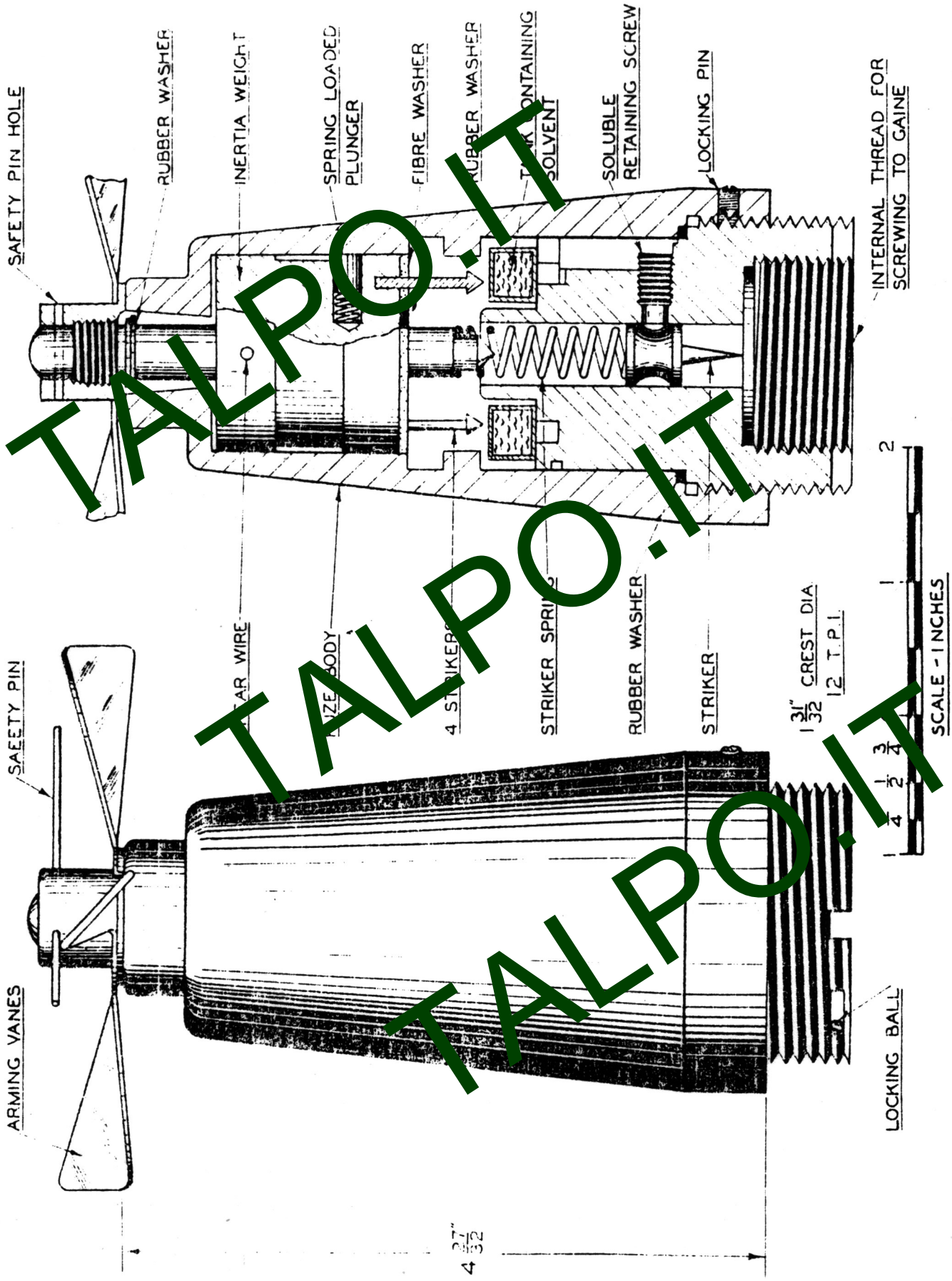

TALPO.IT

FUZE, BOMB, NOSE. — LONG DELAY

TYPE 99 SPECIAL BOMB NOSE ARMING MECHANISM

C2.(A)

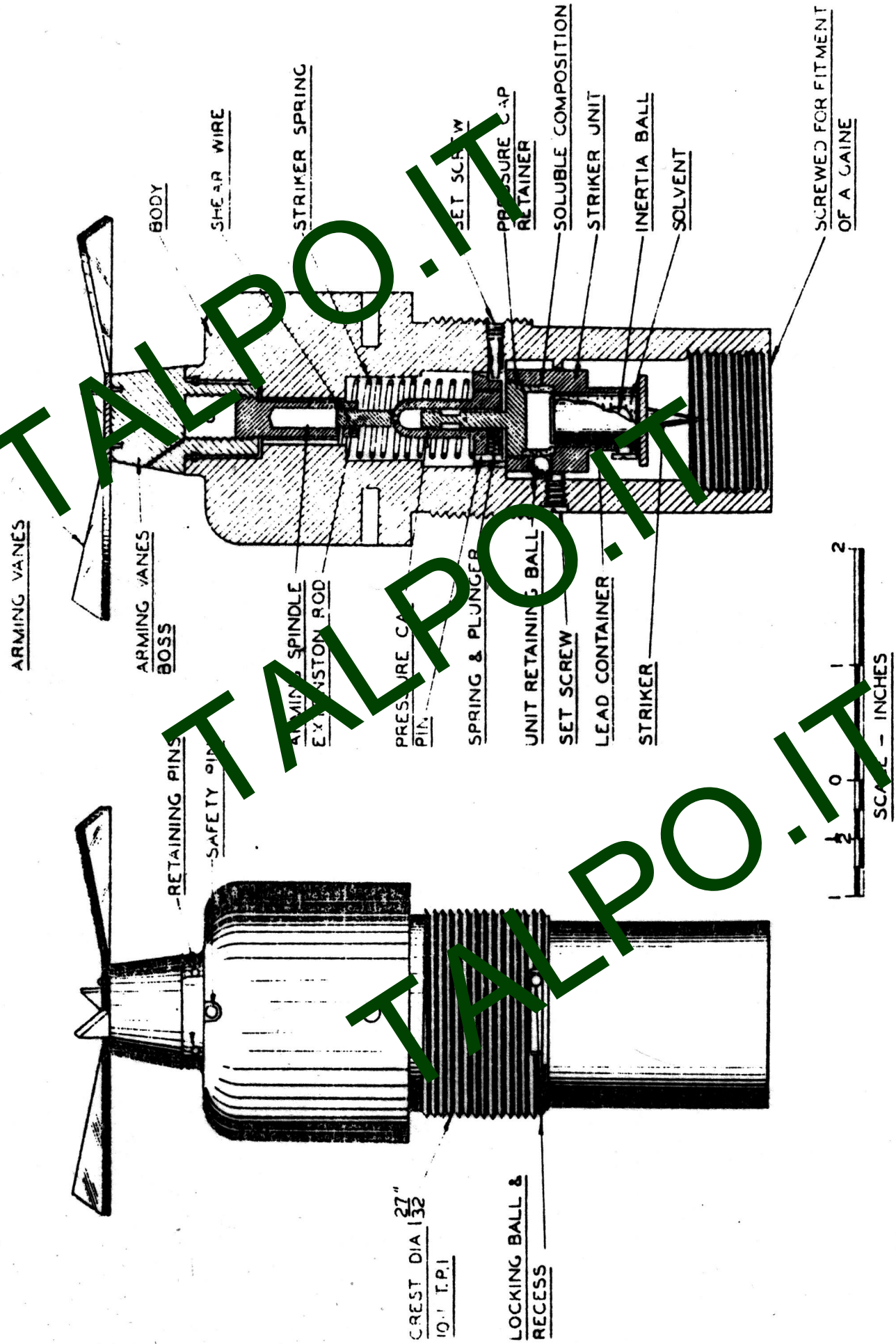

TALPO.IT
TALPO.IT
TALPO.IT

FUZE, BOMB, NOSE. LONG DELAY

TYPE. I. INDETERMINATE LONG DELAY NOSE FUZE

C(3A)

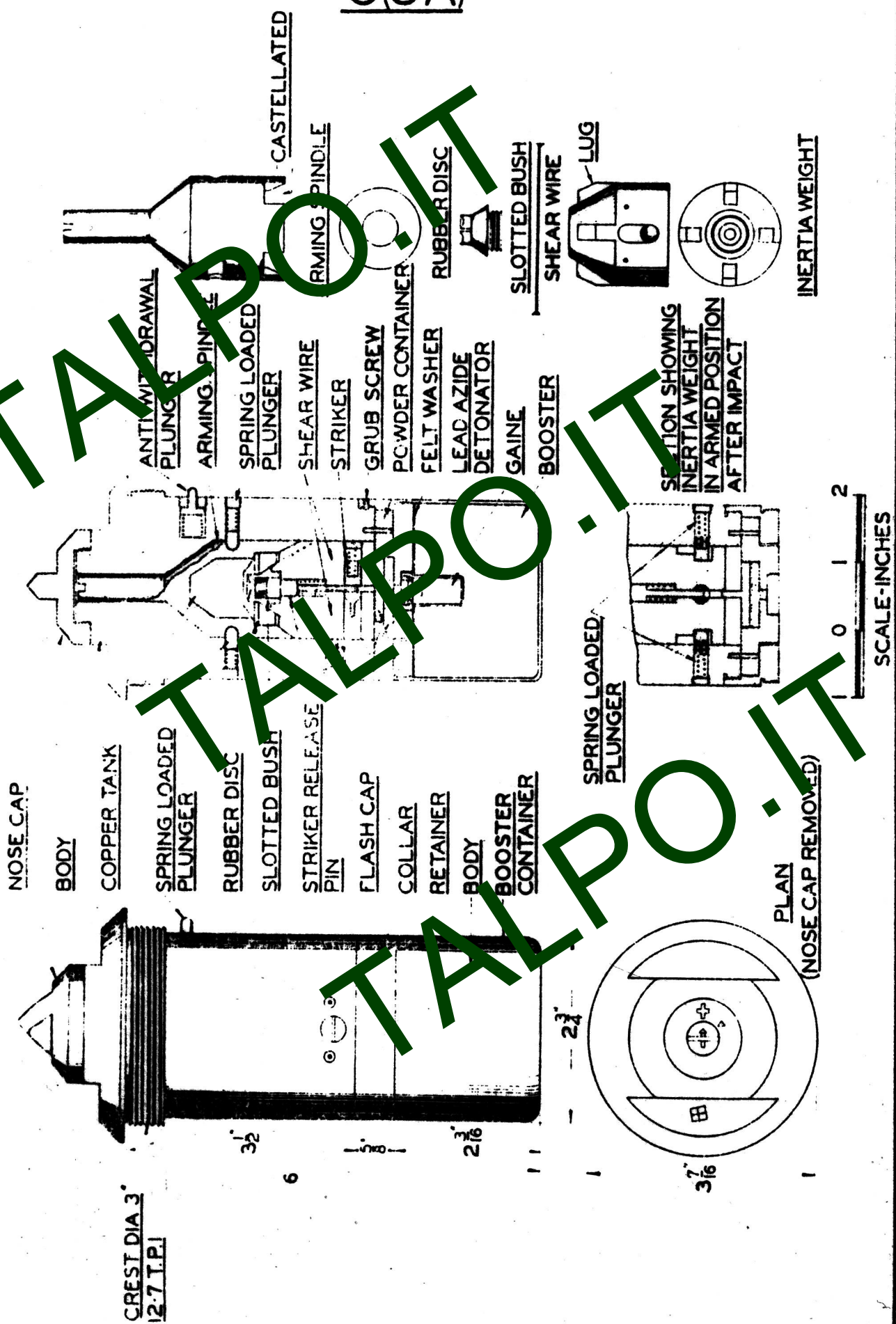

TALPO.IT

FUZE. PAMPHLET CONTAINER. NOSE AIR DELAY.

FUZE FOR EXPERIMENTAL PROPAGANDA BOMB.

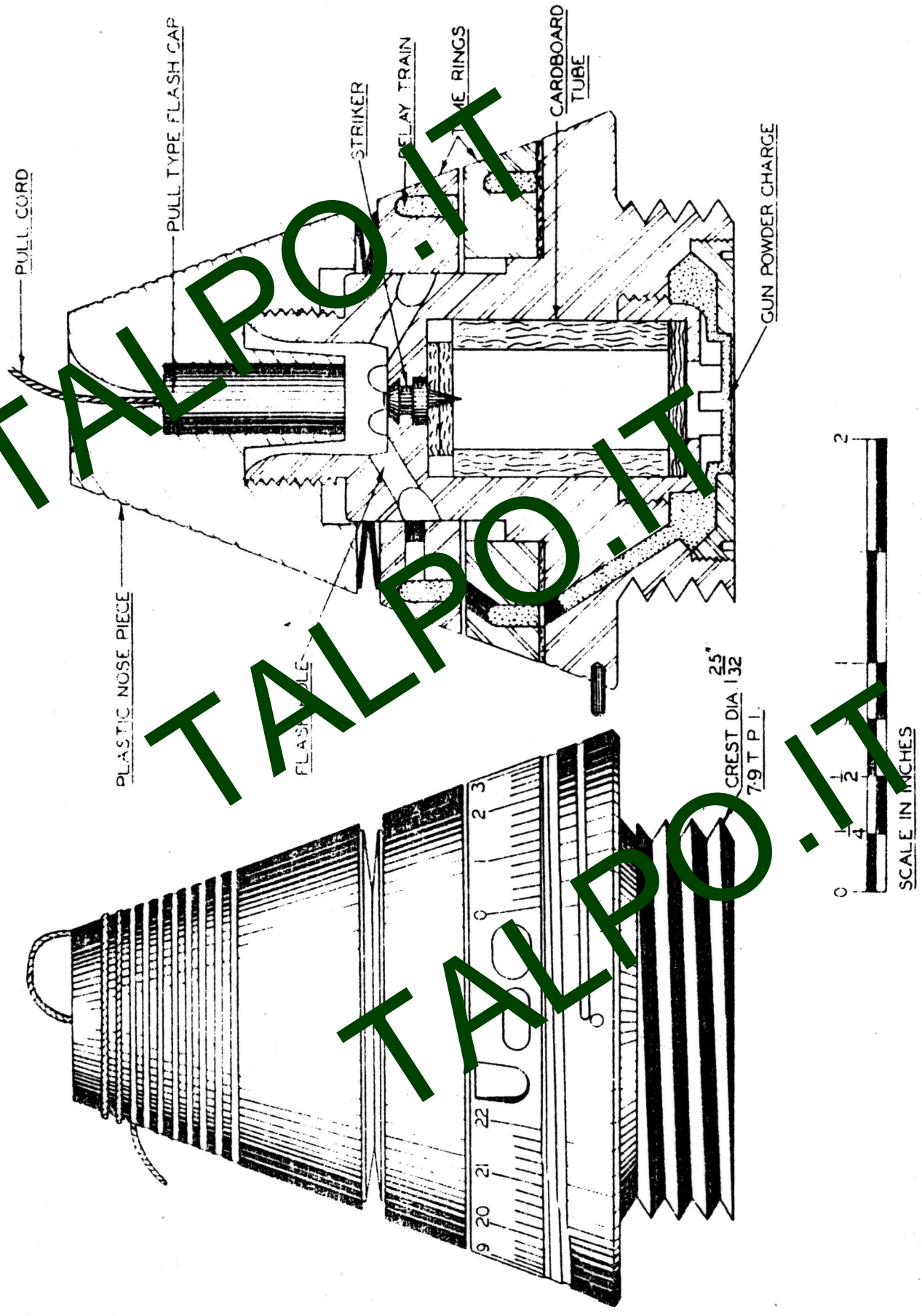

TALPO.IT
TALPO.IT
TALPO.IT

FUZE, PAMPHLET CONTAINER, NOSE

D I.(A)

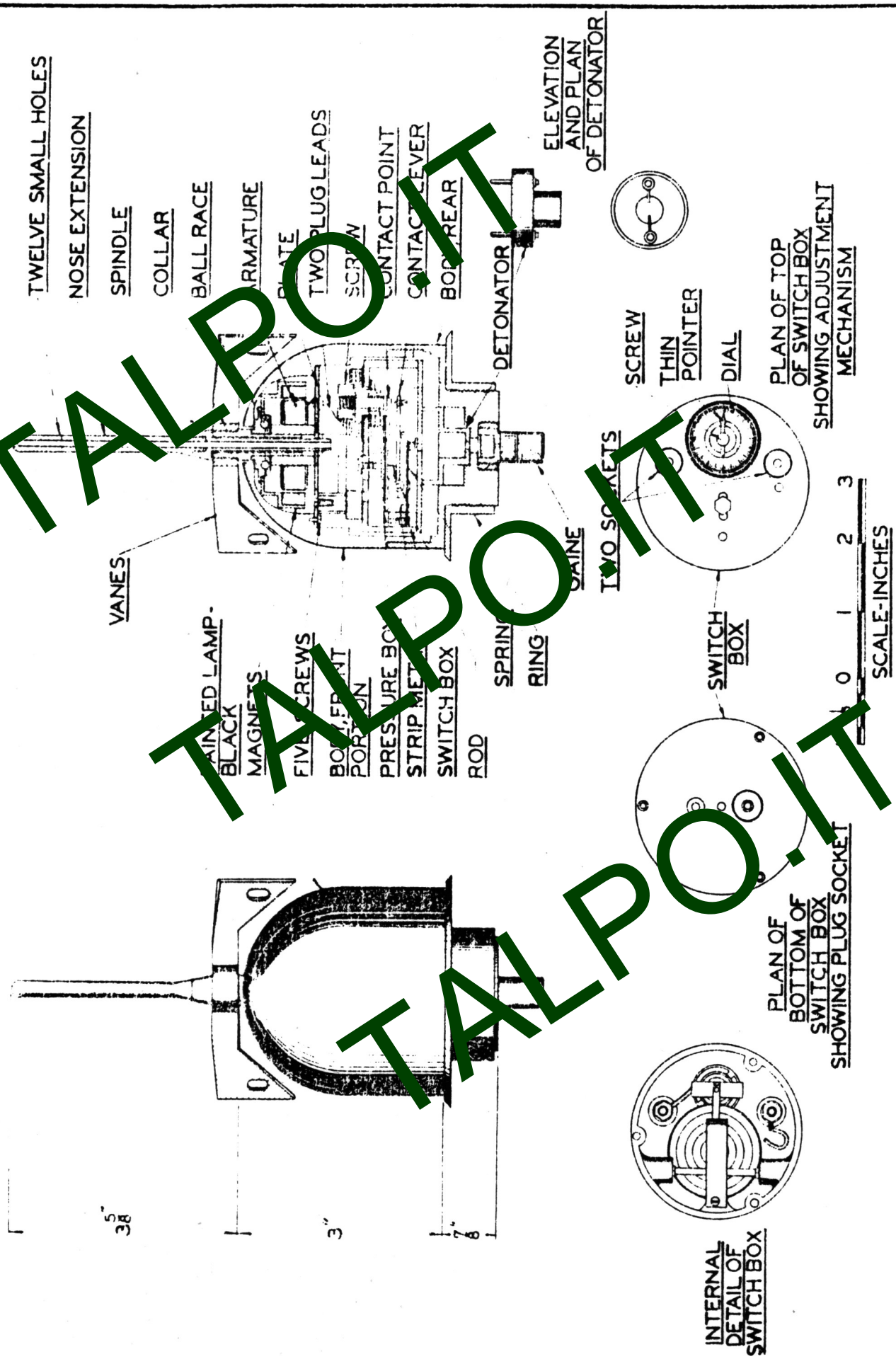

TALPO.IT
TALPO.IT
TALPO.IT

FUZE, BOMB, TAIL. CLOCKWORK AID DELAY

TYPE 2, MARK 3, MODEL 2 BOMB TAIL FUZE

D2 (A)

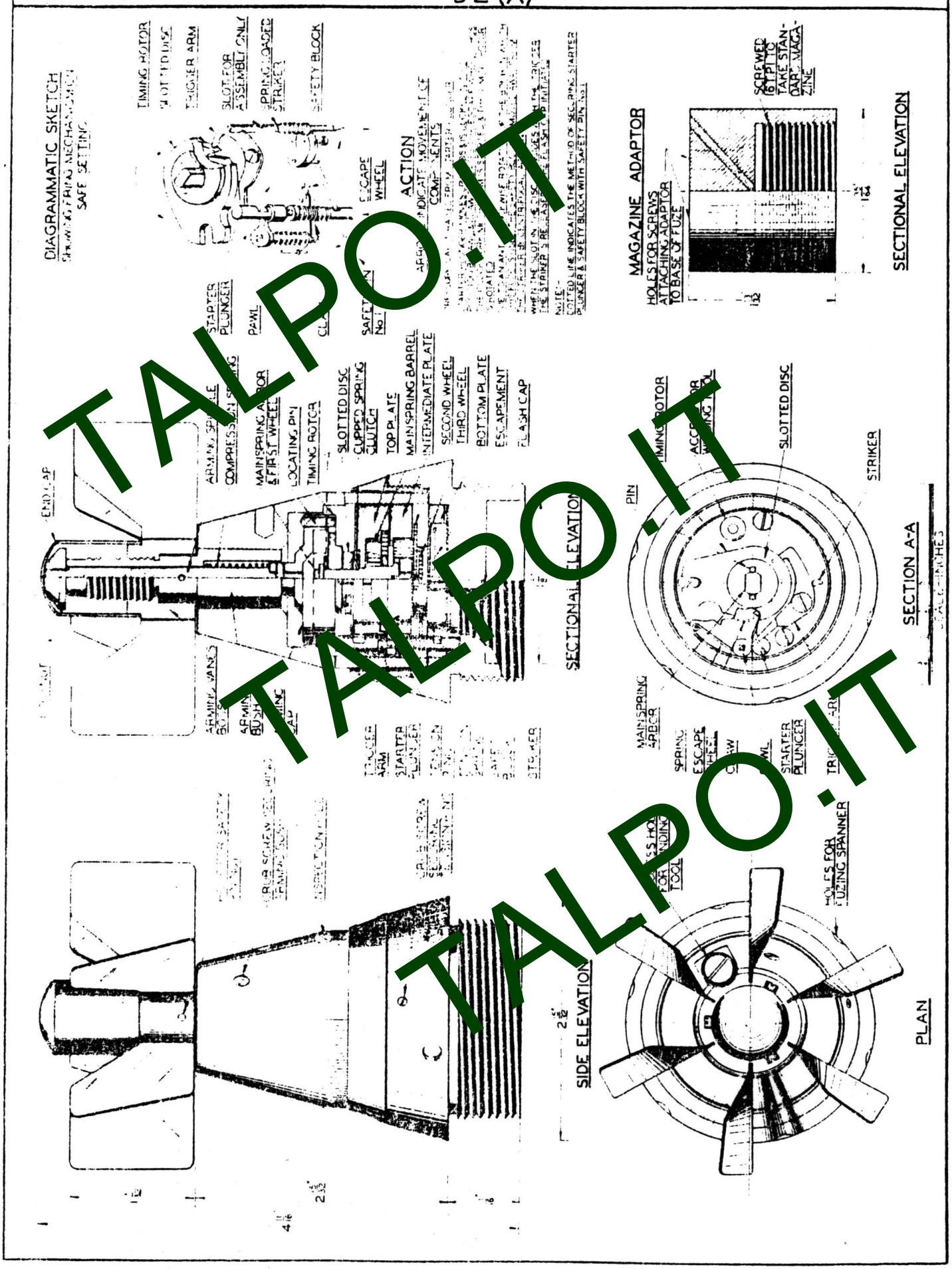

TALPO.IT
TALPO.IT
TALPO.IT

FUZE. BOMB. TAIL. CLOCKWORK AIR DELAY.

"TYPE 99, MARK 3, BOMB FUZE."

D2.(B)

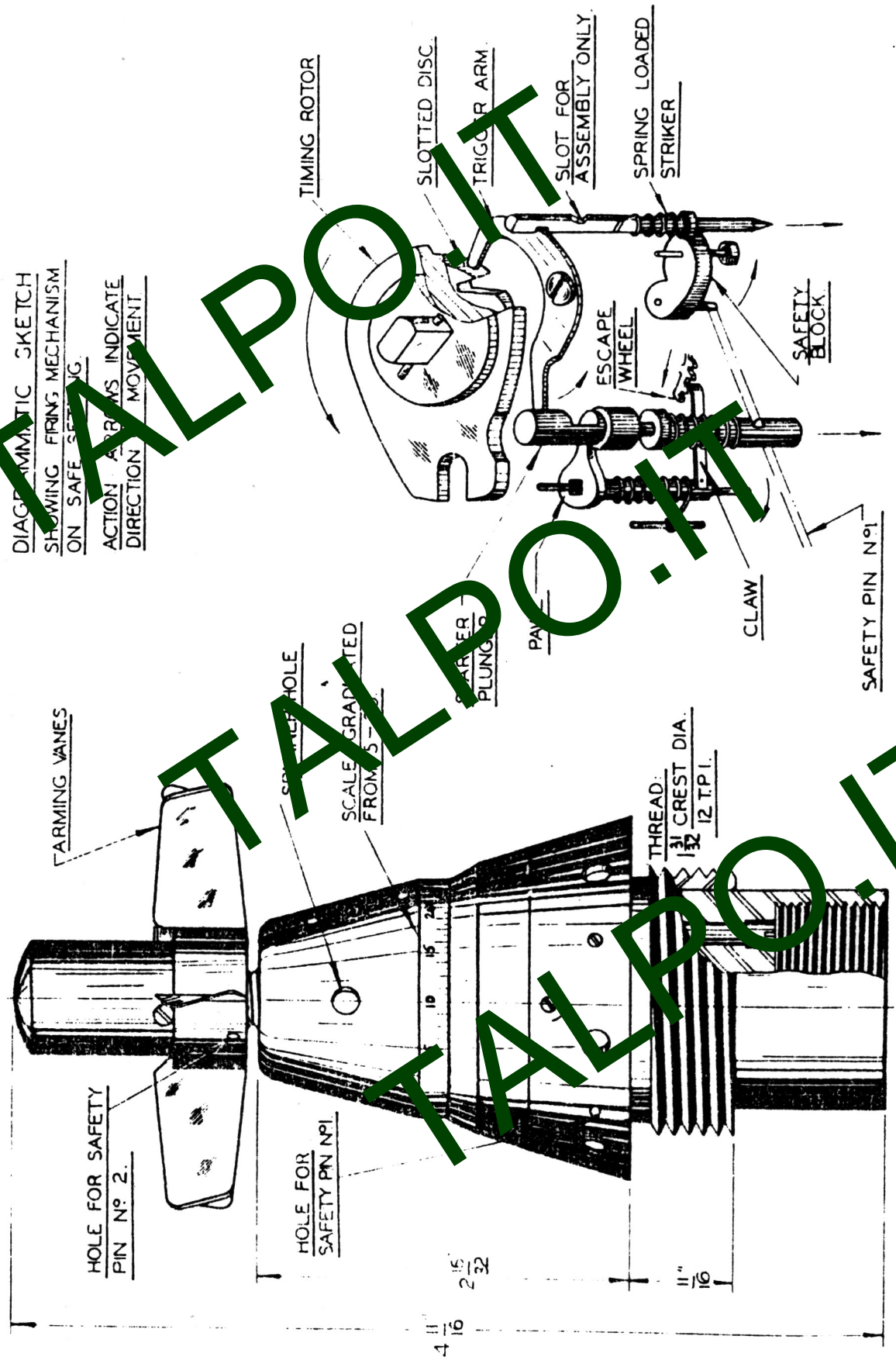

TALPO.IT
TALPO.IT
TALPO.IT

FUZE. BOMB. TAIL. CLOCKWORK AIR DELAY.

"EXPERIMENTAL MODEL 14. MARK 3. BOMB FUZE."

D 2.(C)

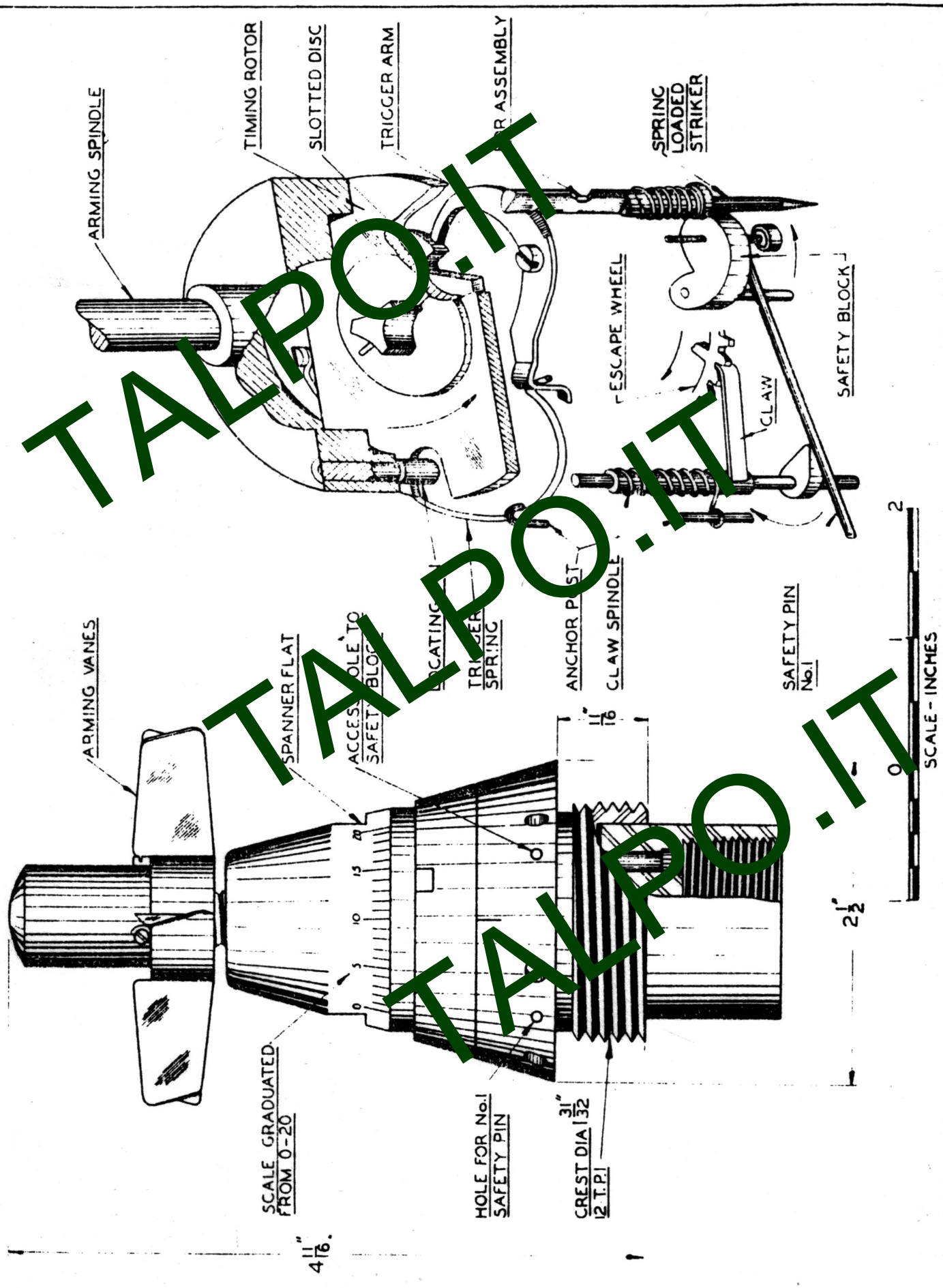

TALPO.IT
TALPO.IT
TALPO.IT

A.C.D. 155.	LEAFLET No. 63/01	SECTION No. 14

FUZE. FLARE. NOSE. AIR TIME DELAY.

TYPE IGNITION DEVICE.

D3.(A)

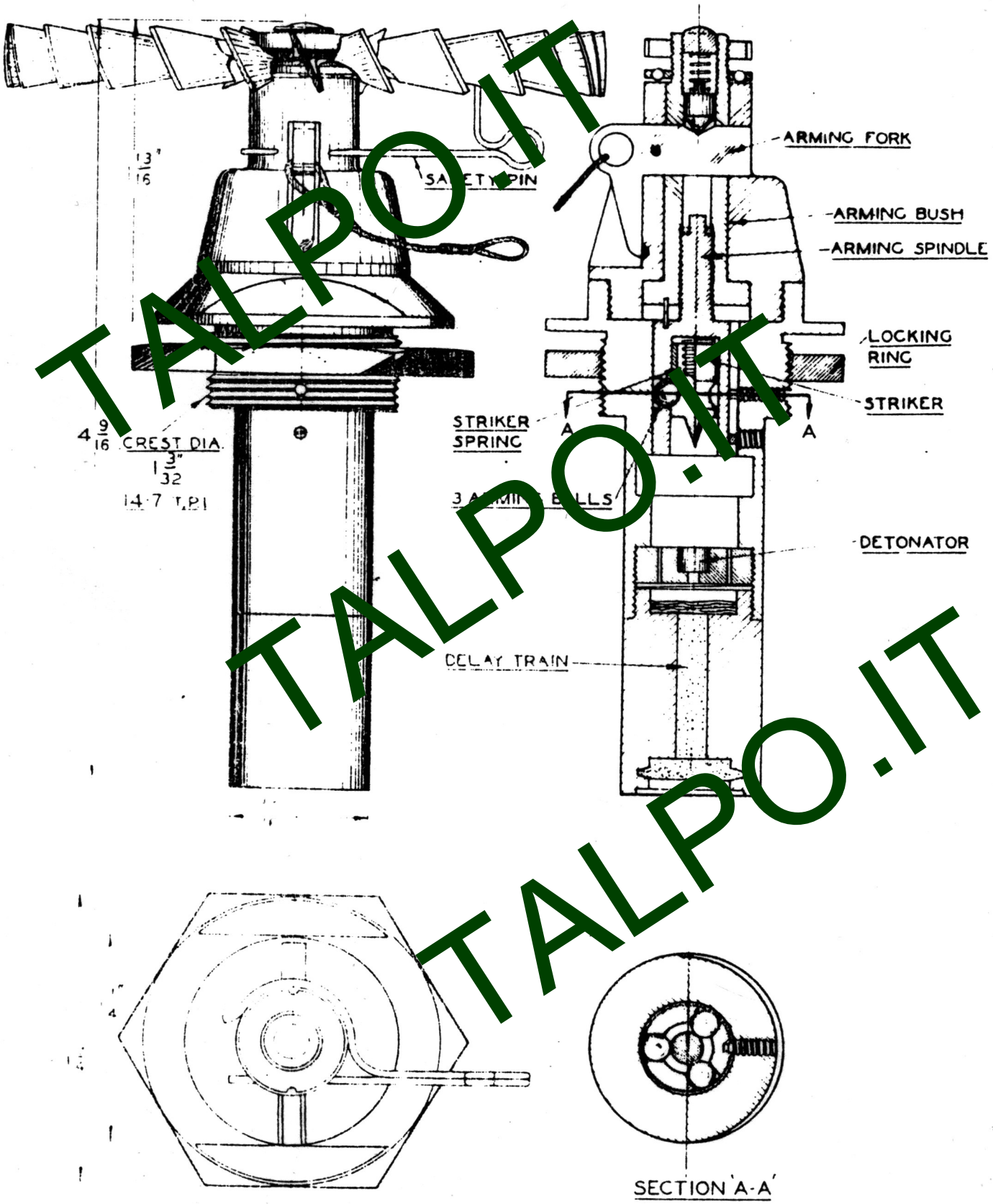

TALPO.IT
TALPO.IT
TALPO.IT

FUZE, FLARE, NOSE, AIR TIME DELAY.

"TYPE O, MODEL I, IGNITION DEVICE."

D4.(A)

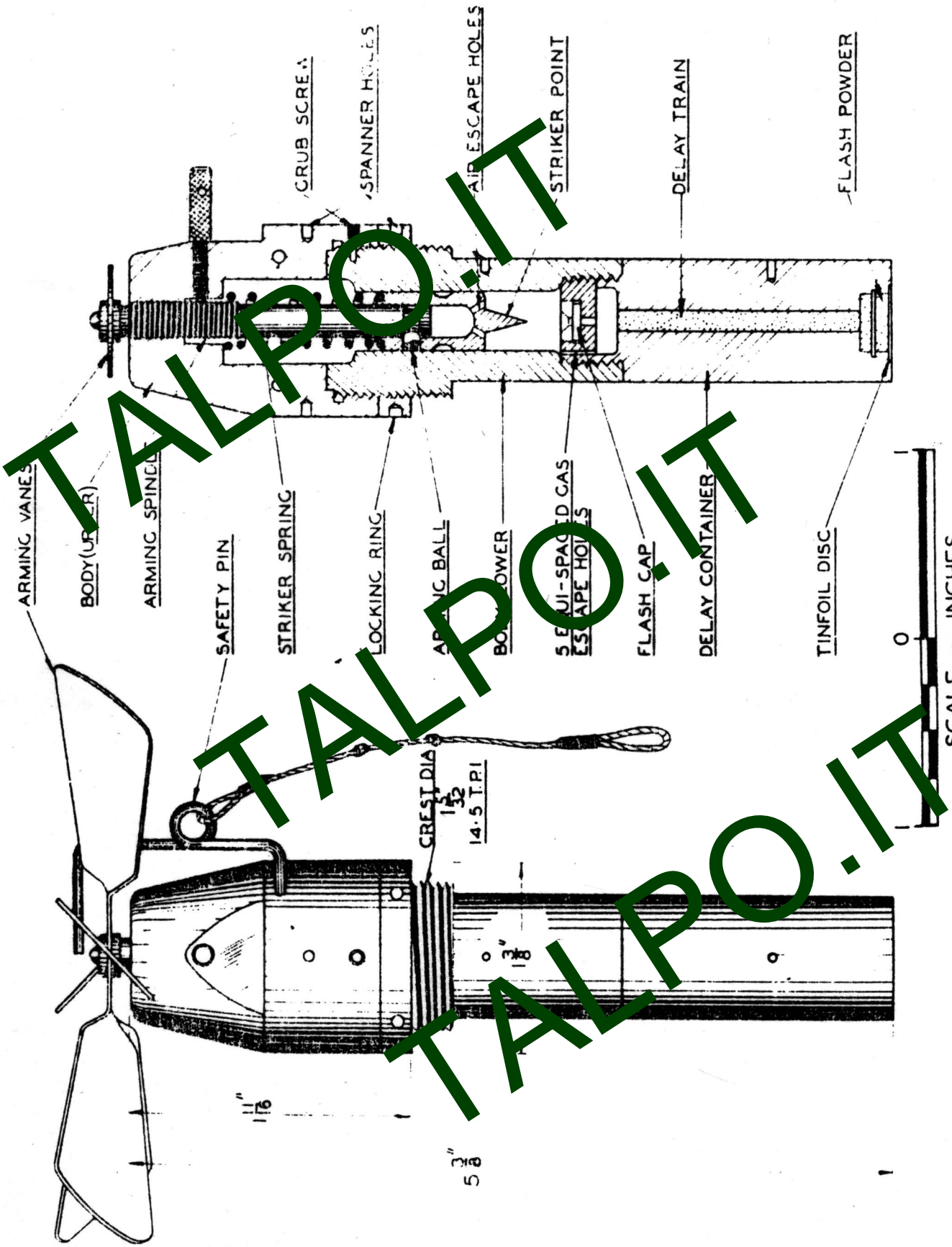

TALPO.IT
TALPO.IT
TALPO.IT

FUZE BOMB OR FLARE, NOSE. AIR DELAY OR IMPACT

TYPE I TIME NOSE FUZE D5(A)
TYPE I COMBINATION NOSE FUZE D5(B)

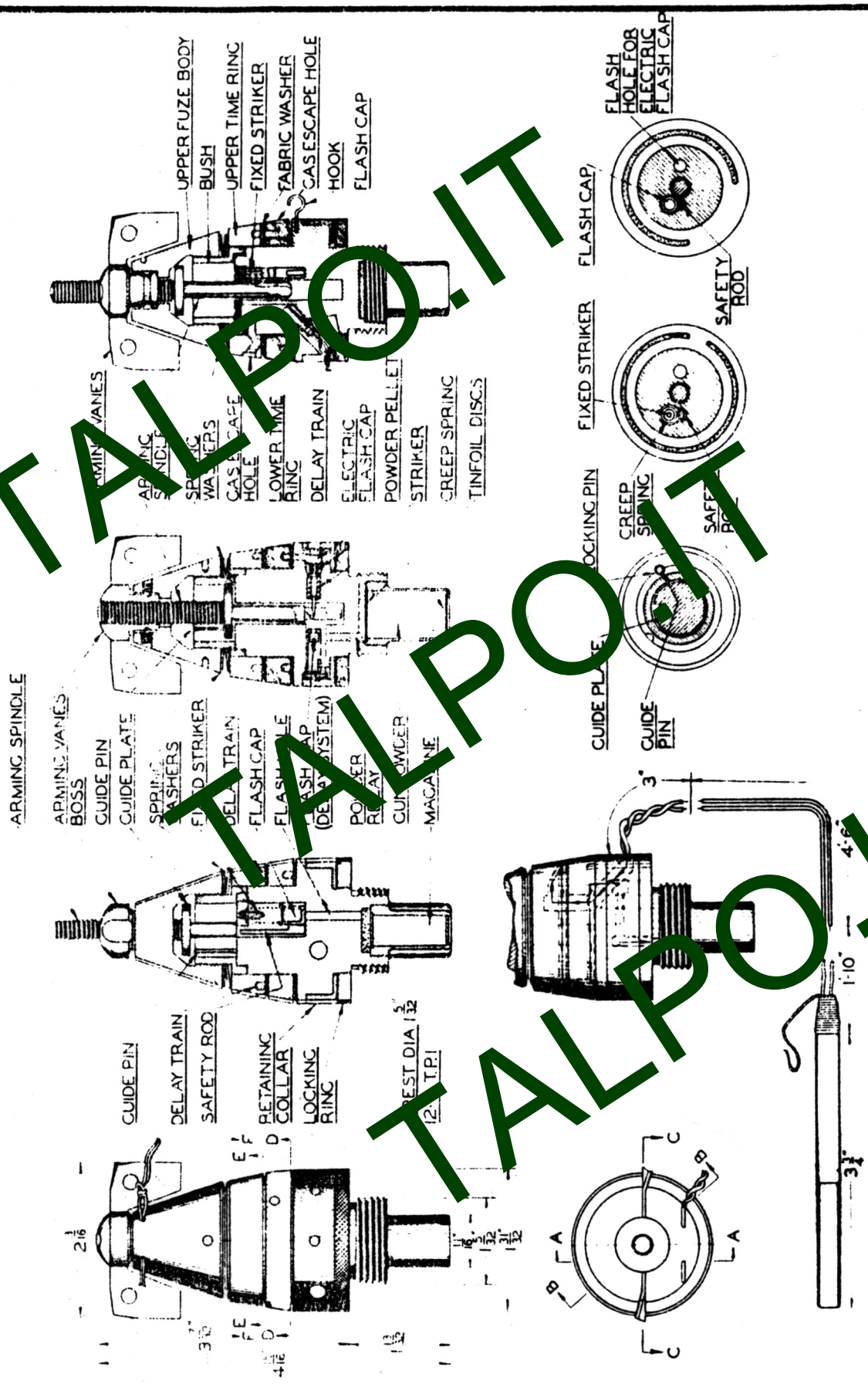

TALPO.IT
TALPO.IT
TALPO.IT

FUZE, BOMB, TAIL, ANTIWITHDRAWAL
"TYPE I ANTI-WITHDRAWAL FUZE" (ARMY)
E I. (A)

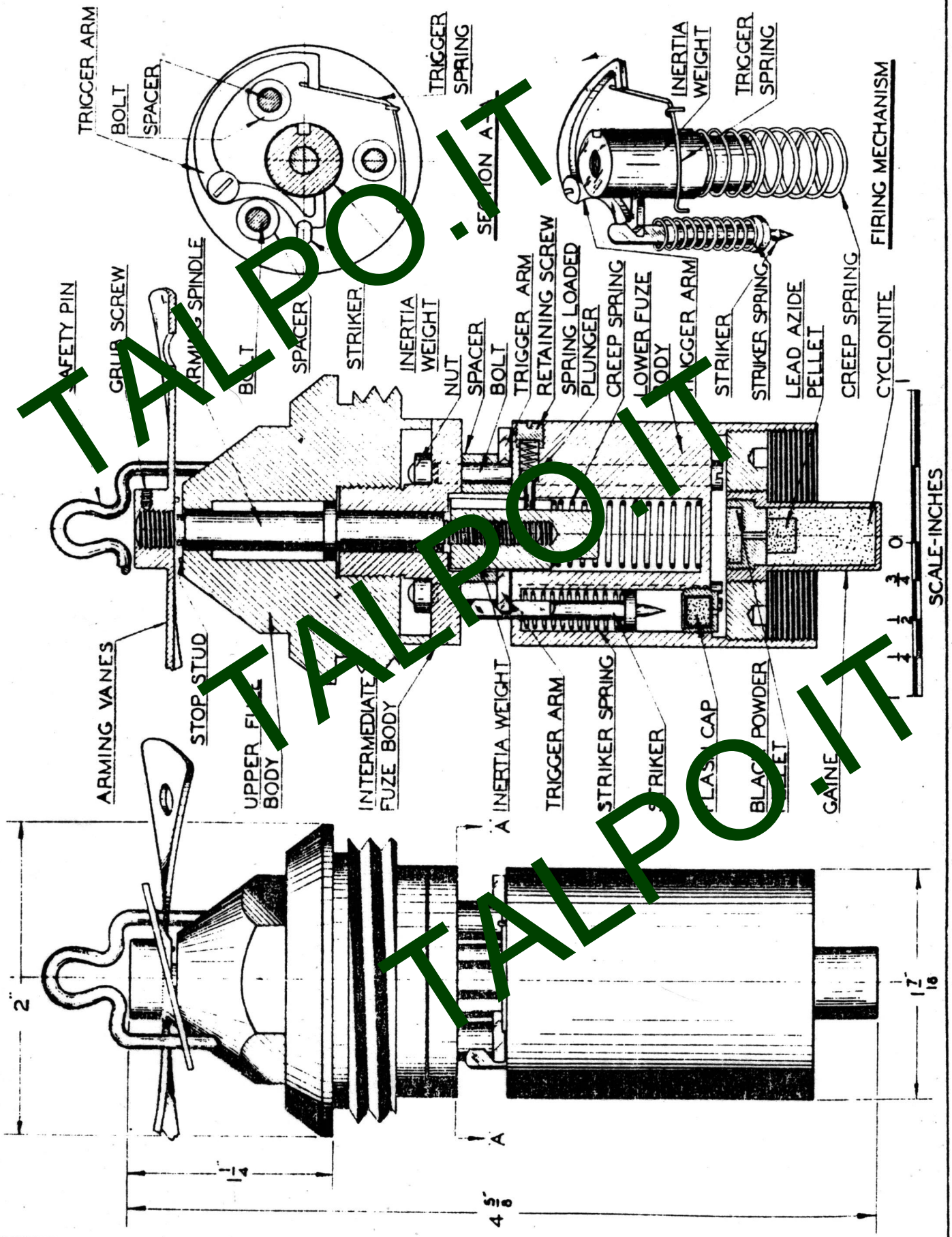

TALPO.IT
TALPO.IT
TALPO.IT